SOLENOID OPERATED

DIRECTIONAL CONTROL VALVE

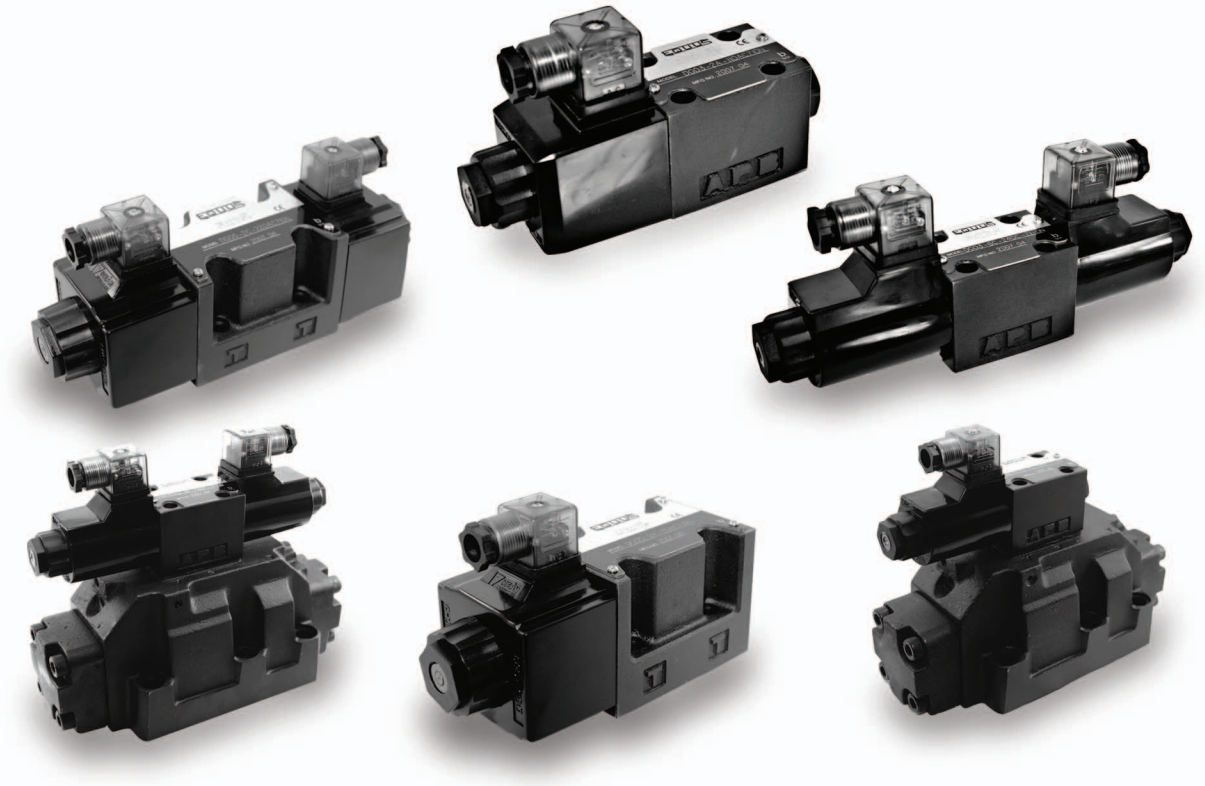

EDG03 Size 6

Characteristics :

- Highest performance in NG 6.
- Optimized spool design to reduce flow force.
- Proven quality through 10 million endurance test.
- Coil outside cover with BMC fire proof material.
- Surge suppressor inside DC wiring box type.
- Connections to DIN, ISO and CETOP.

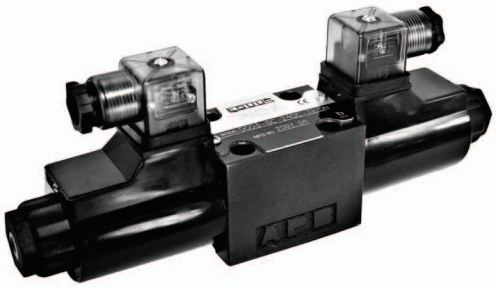

Model: DG03-2C-D2-DN-70

Model: DG03-2B-D2-DN-70

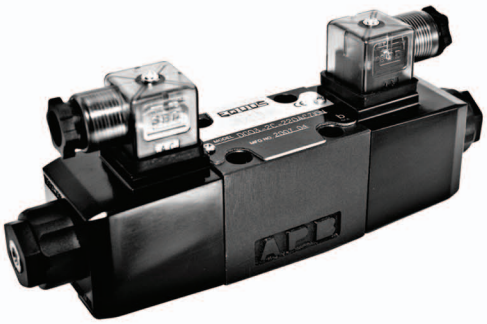

Model: DG03-2C-A2-DN-70

Specification :

Maximum flow		80 l/min {21 GPM}
Maximum operating pressure		320 bar {4500 PSI}
Maximum permissible back pressure		160 bar {2285 PSI}
Ambient temperature range		-15˚C~50˚C
Hydraulic fluid temperature		-15˚C~70˚C
Viscosity range		15~400mm²/s
Hydraulic oil		ISO VG 32,46,68
Fluid cleanliness		NAS class 9 MAX.
Degree of protection to DIN40050 and IEP		IP65
Maximum change over frequency		240 times/min (AC,DC)
		120 times/min (RF)
Mounting pattern		ISO 4401-AB-03-4-A
Weight	Single solenoid	1.7Kg (DC);1.6Kg(AC)
	Double solenoid	2.1Kg (DC);2.0Kg(AC)
Valve fixing screws	Matrix	M5x45L x4pcs.
	Inch	10#~24UNCx1-3/4"L x4pcs
Tightening torque		5~7Nm

Cross section diagram :

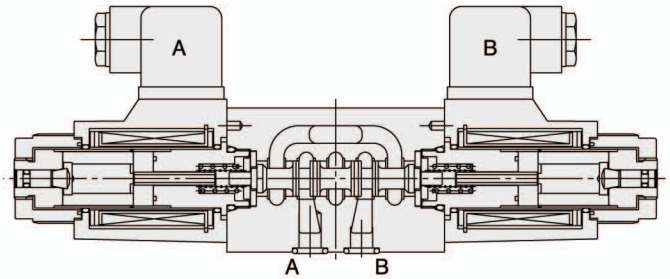

DG03-2C-A ∗-DN-70

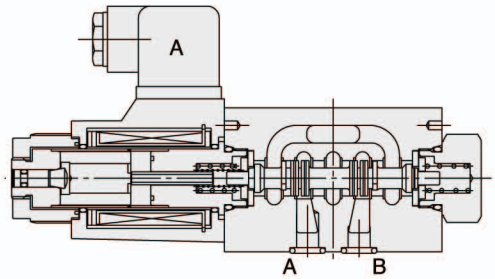

DG03-2A-A ∗-DN-70

Subplate dimensions : EDG03 Size 6

Bottom connection

DGSP-03 ∗ - ∗

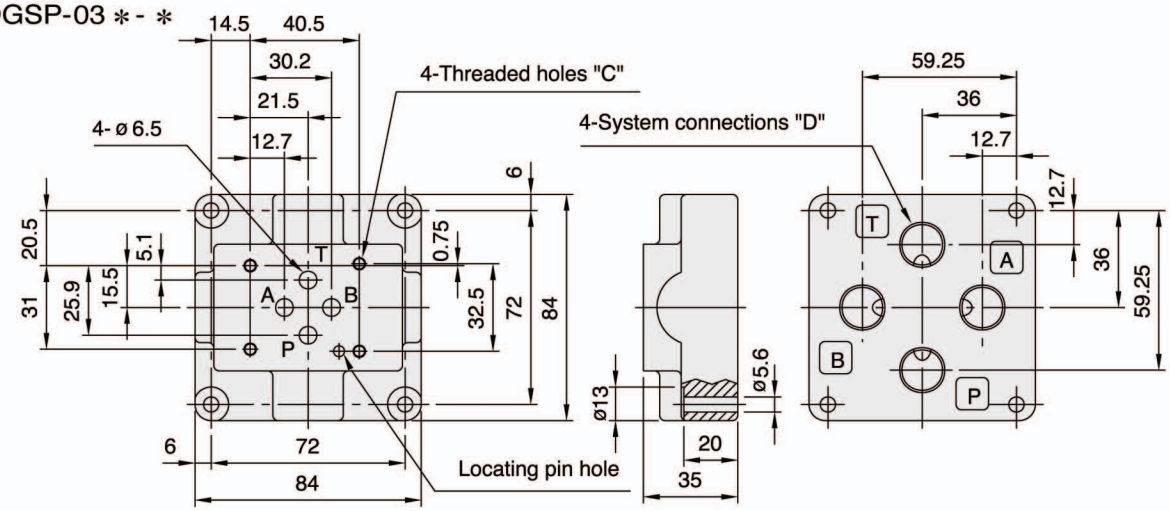

Model	C	D	Weight
DGSP-03-6	M5x14 Deep(min) full thread depth	3/8"Rc	1.4Kg
DGSP-03-8		1/2"Rc	
DGSP-03G-6		3/8"BSP	
DGSP-03G-8		1/2"BSP	

Model	C	D	Weight
DGSP-03N-6	No.10-24UNC-2B Thd.x1/2" Deep full thread depth	3/8"NPT	1.4Kg
DGSP-03N-8		1/2"NPT	
DGSP-03S-6		3/8"SAE	
DGSP-03S-8		1/2"SAE	

Side connection

DGSP-03 ∗ - ∗E

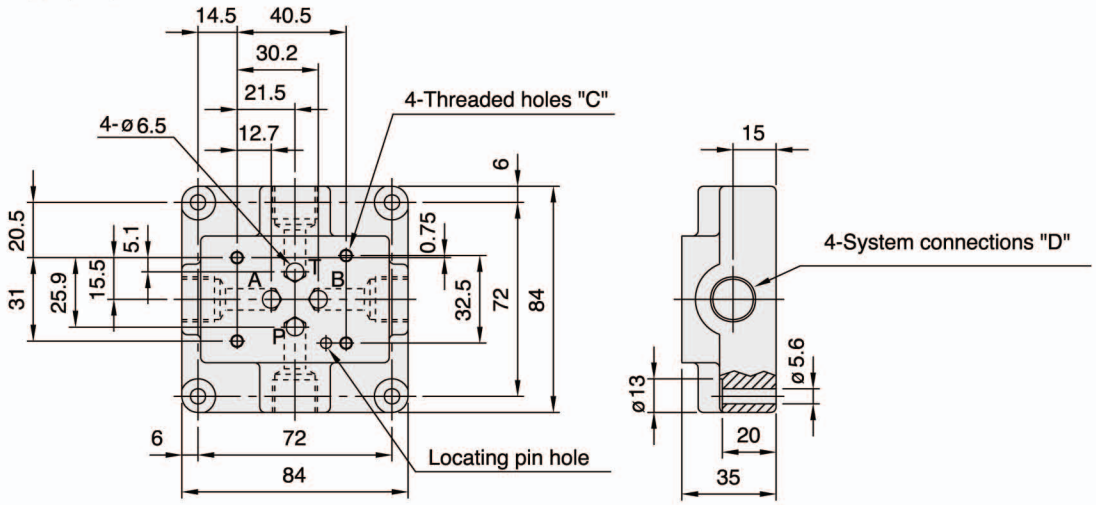

Model	C	D	Weight
DGSP-03-6E	M5x14 Deep(min) full thread depth	3/8"Rc	1.4Kg
DGSP-03-8E		1/2"Rc	
DGSP-03G-6E		3/8"BSP	
DGSP-03G-8E		1/2"BSP	

Model	C	D	Weight
DGSP-03N-6E	No.10-24UNC-2B Thd.x1/2" Deep full thread depth	3/8"NPT	1.4Kg
DGSP-03N-8E		1/2"NPT	
DGSP-03S-6E		3/8"SAE	
DGSP-03S-8E		1/2"SAE	

EDG05 Size 10

Characteristics :

- Highest performance in NG 10.
- Optimized spool design to reduce flow force.
- Proven quality through 10 million endurance test.
- Coil outside cover with BMC fire proof material.
- Surge suppressor inside DC wiring box type.
- Connections to DIN, ISO and CETOP.

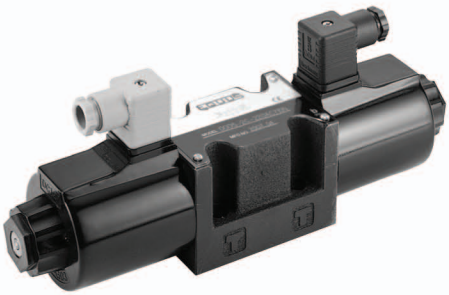

Model: DG05-2C-D2-DN-70

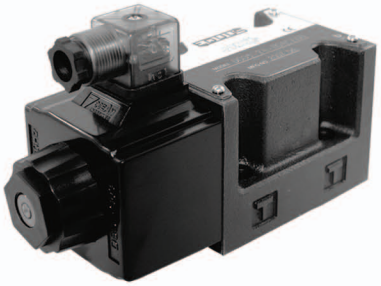

Model: DG05-2B-A2-DN-70

Model: DG05-2C-A2-DN-70

Specification :

Maximum flow		160 l/min {42 GPM}
Maximum operating pressure		320 bar {4500 PSI}
Maximum permissible back pressure		160 bar {2285 PSI}
Ambient temperature range		-15˚C~50˚C
Hydraulic fluid temperature		-15˚C~70˚C
Viscosity range		15~400mm²/s
Hydraulic oil		ISO VG 32,46,68
Fluid cleanliness		NAS Class 9 MAX.
Degree of protection to DIN40050 and IEP		IP65
Maximum change over frequency		180 times/min(AC,DC)
		120 times/min (RF)
Mounting pattern		ISO 4401-AC-05-4-A
Weight	Single solenoid	4.4kg(DC);3.6kg(AC)
	Double solenoid	6.1kg(DC);4.6kg(AC)
Valve fixing screws	Matrix	M6x35L x4pcs.
	Inch	1/4"~20UNCx1-3/8"L x4pcs
Tightening torque		12~15 Nm

Cross section diagram :

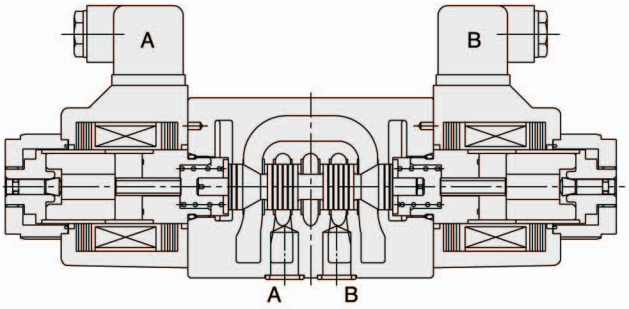

DG05-2C-A ∗-DN-70

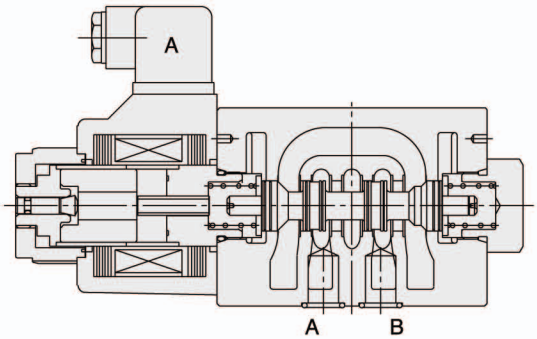

DG05-2A-A ∗-DN-70

Ordering code : EDG05 Size 10

D	G	05	-	2C	-	A1	-	DN	-	70	-	* *
1	2	3		4 5		6		7		8		9

1 Directional Control Valve

2 Manifold or Subplate Mounting

3 Nominal valve size

- Nominal valve size: NG 10,CETOP 5 and ISO 4401-05.

4 Type of Spool(Center Condition)

- 0: Open center(all ports).
- 1: Open center(P,A to T).
- 2: Closed center(all ports).
- 3: Closed center(P,B).
- 6: Closed center(P only).
- 7: Open center(P to A,B).
- 8: Tandem center(P to T).
- 11: Open center(P,B to T).
- 22: Closed center(two way).
- 31: Closed center(P,A).
- 33: Closed center(bleed A,B).

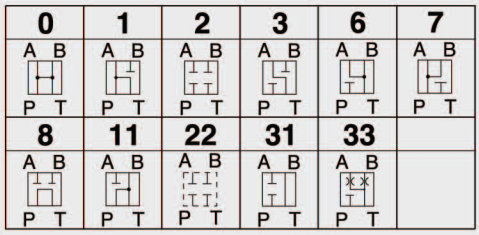

5 Spring Arrangement

- A: Spring offset to port "A" single solenoid.
- B: Spring centered-single solenoid.
- C: Spring centered-double solenoid.
- F: Spring offset-shift to center-single solenoid.
- N: Without spring with detent.

6 Electric Power Source Indication

- A1: AC110V,50Hz/AC120V,60Hz;
- A2: AC220V,50Hz/AC240V,60Hz;;
- D1: DC12V;
- D2: DC24V;
- R1: AC110V,50/60Hz; Rectifier built-in type
- R2: AC220V,50/60Hz; Rectifier built-in type

7 Electrical Options

- DN: DIN 43650 Coils.
- WB: Wiring housing with G1/2 thread and indicator lights.

8 Design Number

- 70: Without indicator lights.
- 71: With indicator lights.
- 72: Without angled plug but with cap.

9 Optional Inquiry

Spool types : EDG05 Size 10

Position type at neutral	Double solenoid valves, spring centered -C-	Single solenoid valves, solenoid at port A end -B-	Single solenoid valves, solenoid at port B end -BL-
0	DG05-0C	DG05-0B	DG05-0BL
1	DG05-1C	DG05-1B	DG05-1BL
2	DG05-2C	DG05-2B	DG05-2BL
		DG05-2F	DG05-2FL
3	DG05-3C	DG05-3B	DG05-3BL
6	DG05-6C	DG05-6B	DG05-6BL
7	DG05-7C	DG05-7B	DG05-7BL
8	DG05-8C	DG05-8B	DG05-8BL
11	DG05-11C	DG05-11B	DG05-11BL
31	DG05-31C	DG05-31B	DG05-31BL
33	DG05-33C	DG05-33B	DG05-33BL

Spool types : EDG05 Size 10

Position type during transition	Double solenoid valves, two-position (detented) -N-	Single solenoid valves, solenoid at port A end -A-	Single solenoid valves, solenoid at port B end -AL-
0 		DG05-0A 	DG05-0AL 
2 	DG05-2N 	DG05-2A 	DG05-2AL 
6 		DG05-6A 	DG05-6AL 
7 		DG05-7A 	DG05-7AL 
22 		DG05-22A 	DG05-22AL 

Features of electro-mangnetic coil :

Solenoid Classification	Power Source	Voltage (V)	Frequency (Hz)	Inrush Current (A)	Holding Current (A)	Holding Powert (W)	Permissible Voltage (%)	Insulation Grade	Coil Insulation Class	Insulation Resistance (MΩ)
AC	A1	110	50	6.2	0.63		+10,-15	B	H (180˚C)	>50
		120	60	6.0	0.54		+10,-15			
	A2	220	50	3.1	0.32		+10,-15			
		240	60	3.0	0.27		+10,-15			
DC	D1	12	-	-	3.17	38	+10,-10	B	H (180˚C)	
	D2	24	-	-	1.58	38	+10,-10			
RF	R1	AC110V,50/60Hz ↓ DC99V		-	0.42	41	+10,-10	B	H (180˚C)	
	R2	AC220V,50/60Hz ↓ DC198V		-	0.21	41	+10,-10			

Performance curves : EDG05 Size 10

Perssure Drop Curve Reference Chart

Viscosity of Hydraulic Fluid: 36 mm²/s

Spool Type	C, B, BL								
	Control Position				Neutral Position				
	P→A	B→T	P→B	A→T	P→T	A→T	B→T	P→A	P→B
0	7	10	7	10	8	8	8	6	6
1	6	3	9	11	10	2	-	6	-
2	5	3	5	3	-	-	-	-	-
3	5	3	5	9	-	4	-	-	-
6	5	9	5	9	-	4	4	-	-
7	6	3	6	3	-	-	-	7	7
8	1	10	1	10	11	-	-	-	-
11	9	11	6	3	10	-	2	-	6
31	5	9	5	3	-	-	4	-	-
33	5	3	5	3	-	13	13	-	-

Spool Type	A, AL			
	Control Position			
	P→A	B→T	P→B	A→T
0	6	9	6	6
2	6	3	6	3

Spool Type	N			
	Control Position			
	P→A	B→T	P→B	A→T
2	7	3	7	3

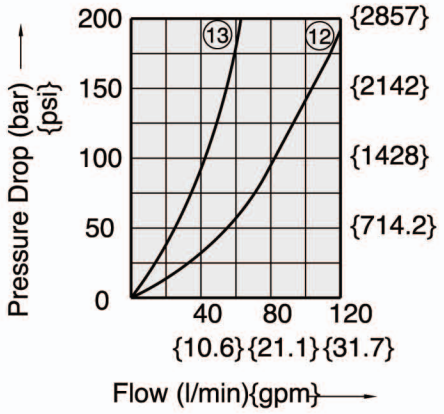

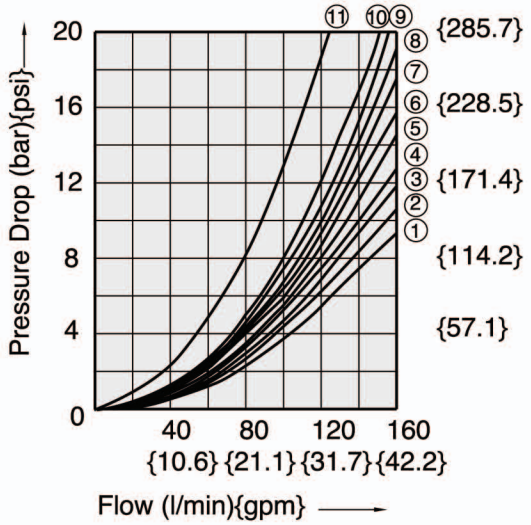

Wiring :

DG05 - ∗C - ∗ - WB - 71

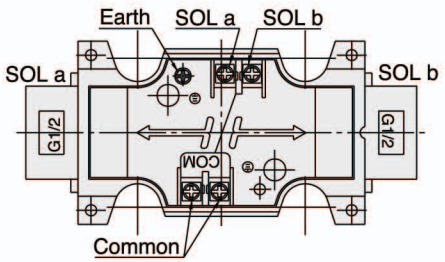

Note)

1. COM terminal is fitted in double solenoid valve for easiness of wiring.
2: Use an earth terminal when ground wiring is necessary.
3: Use a compressed terminal for M3.
4: Fasten the screw of the terminal with 0.5~0.7 N.m {4.3~6.1 lbs.inch} torque.

Dimensions : EDG05 Size 10

AC solenoid (DN Type)

DG05- ∗A-A ∗-DN-70
∗B
∗F

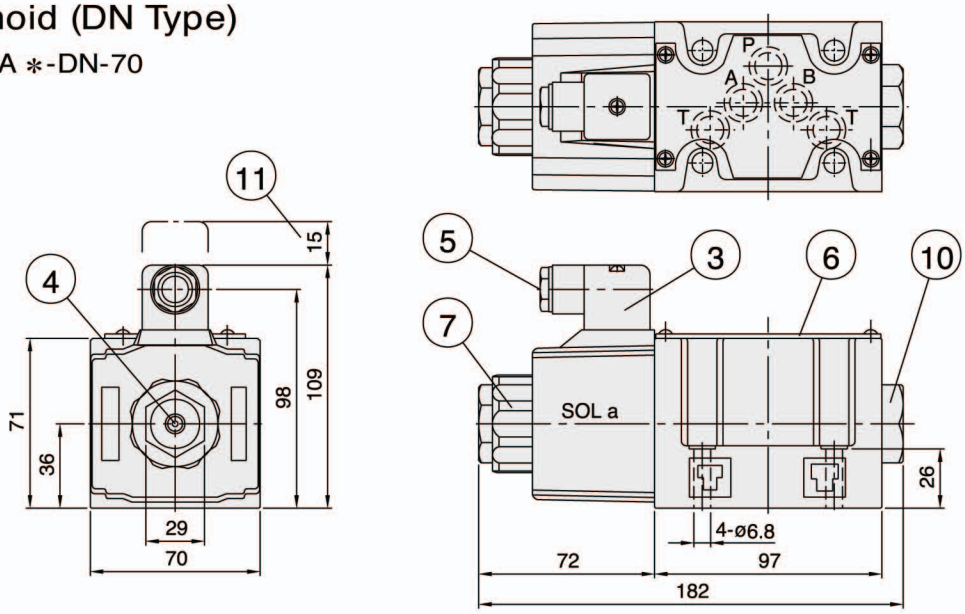

DG05- ∗AL-A ∗-DN-70
∗BL
∗FL

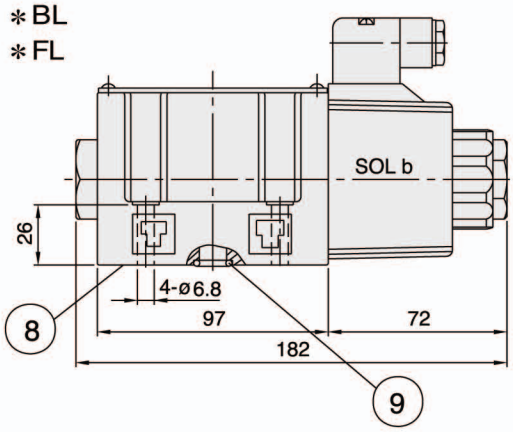

1: Solenoid a, colour of plug: grey
2: Solenoid b, colour of plug: black
3: Angled plug to DIN 43650
4: Push pin for manual operation
5: Lead wire take-out(Cable diameter 6~9 mm)
6: Nameplate
7: Lock nut tightening torque: not exceeding 10.5 Nm
8: Connections to DIN 24340 from A10; valve fixing screws M6x35 DIN 912-10.9 tightening torque 12~15 Nm
9: O-ring AS568-014(Hs90)
10: Plug for valves with 1 solenoid
11: Space required to remove plug
12: Coil removable length

DG05- ∗C-A ∗-DN-70
∗N

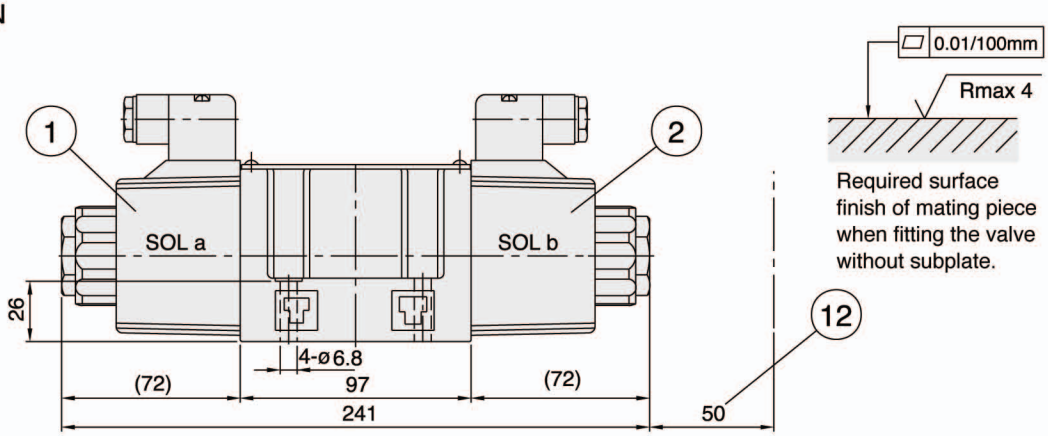

Dimensions : EDG05 Size 10

DC solenoid (DN Type)

DG05- ∗A-D ∗-DN-70
∗B
∗F

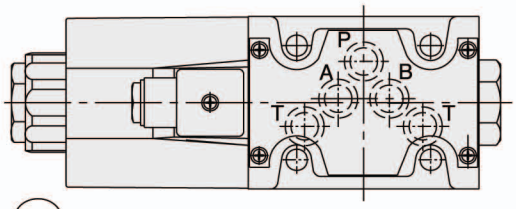

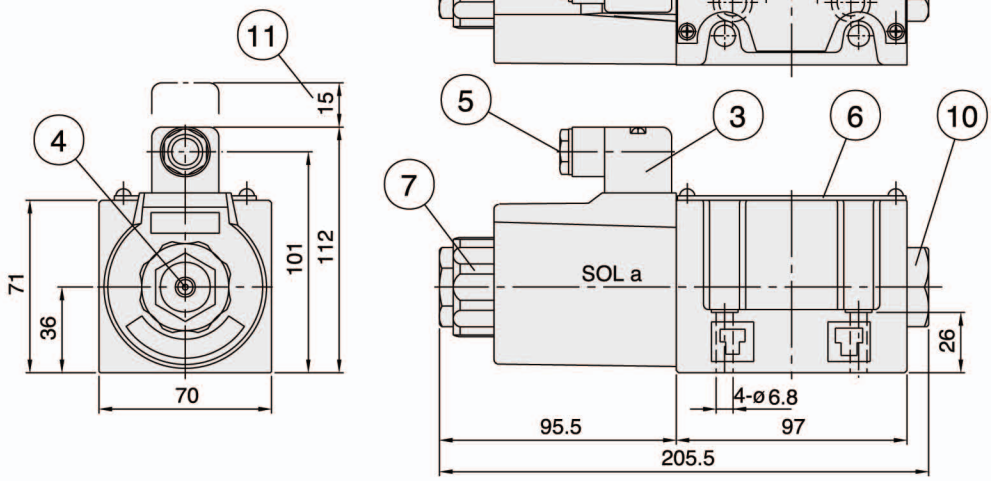

DG05- ∗AL-D ∗-DN-70
∗BL
∗FL

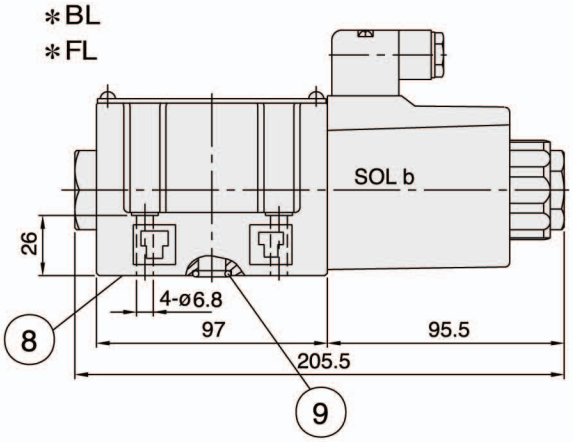

1: Solenoid a, colour of plug: grey
2: Solenoid b, colour of plug: black
3: Angled plug to DIN 43650
4: Push pin for manual operation
5: Lead wire take-out(Cable diameter 6~9 mm)
6: Nameplate
7: Lock nut tightening torque: not exceeding 10.5 Nm
8: Connections to DIN 24340 from A10; valve fixing screws M6x35 DIN 912-10.9 tightening torque 12~15 Nm
9: O-ring AS568-014 (Hs90)
10: Plug for valves with 1 solenoid
11: Space required to remove plug
12: Coil removable length

DG05- ∗C-D ∗-DN-70
∗N

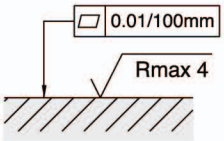

Required surface finish of mating piece when fitting the valve without subplate.

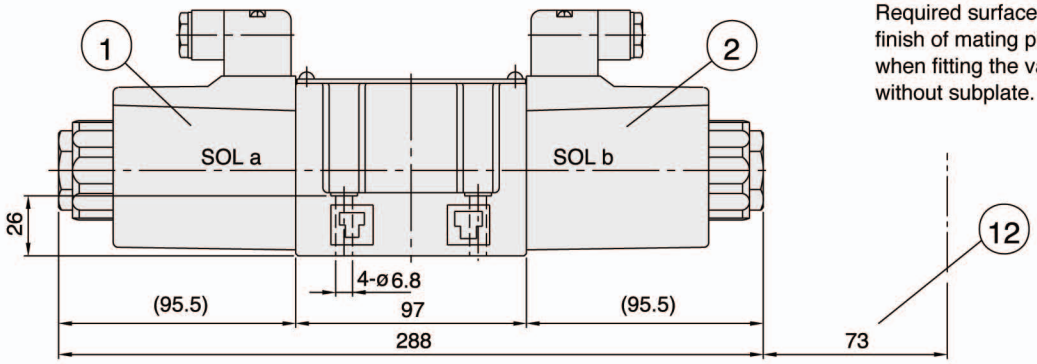

Dimensions : EDG05 Size 10

AC solenoid (WB Type)

DG05- ∗A-A ∗-WB-71
∗B
∗F

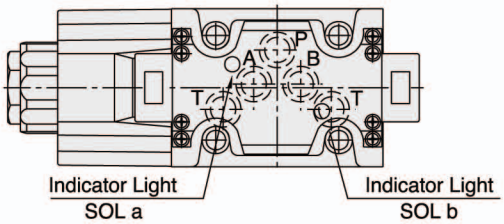

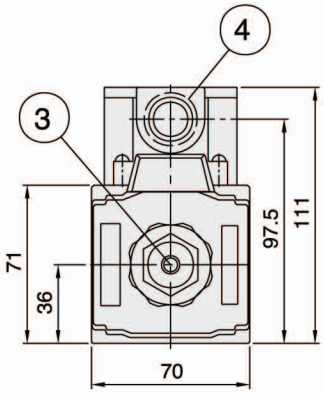

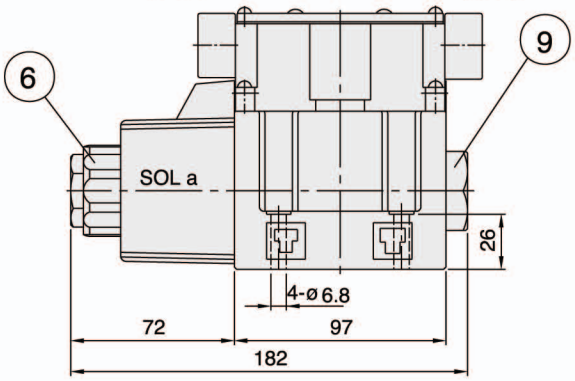

DG05- ∗AL-A ∗-WB-71
∗BL
∗FL

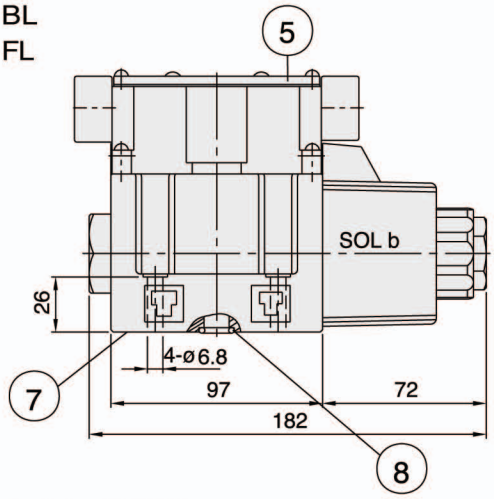

1: Solenoid a
2: Solenoid b
3: Push pin for manual operation
4: Lead wire take-out(G1/2")
5: Nameplate
6: Lock nut tightening torque: not exceeding 10.5 Nm
7: Connections to DIN 24340 from A10; valve fixing screws M6x35 DIN 912-10.9 tightening torque 12~15 Nm
8: O-ring AS568-014 (Hs90)
9: Plug for valves with 1 solenoid
10: Coil removable length

DG05- ∗C-A ∗-WB-71
∗N

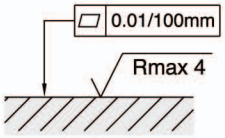

Required surface finish of mating piece when fitting the valve without subplate.

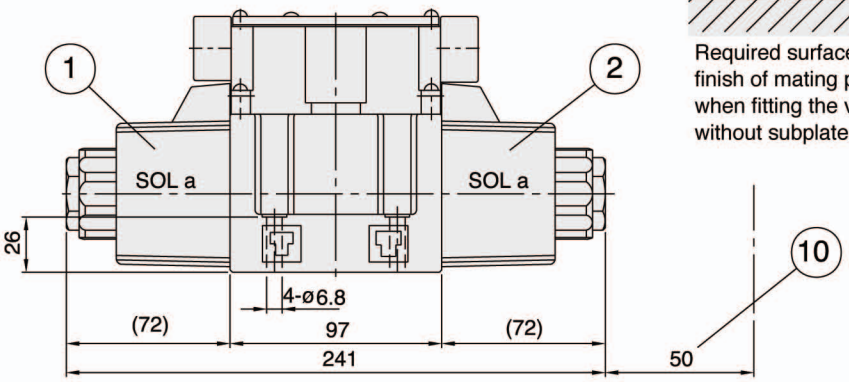

Dimensions : EDG05 Size 10

DC solenoid (WB Type)

DG05- ∗A-D ∗-WB-71
∗B
∗F

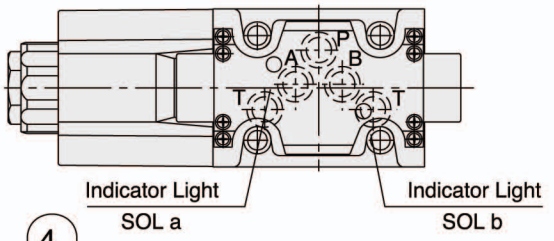

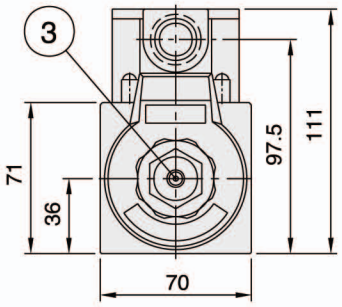

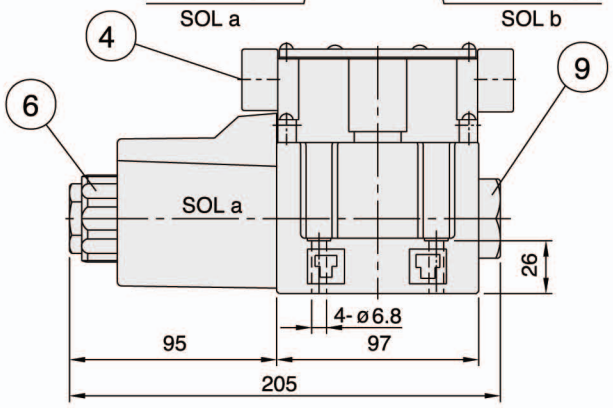

DG05- ∗AL-D ∗-WB-71
∗BL
∗FL

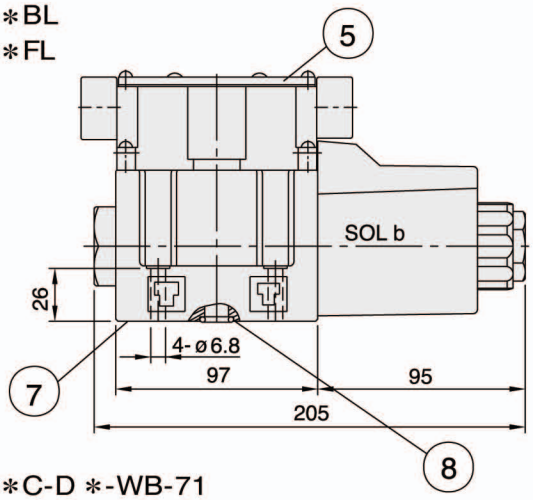

1: Solenoid a
2: Solenoid b
3: Push pin for manual operation
4: Lead wire take-out (G1/2")
5: Nameplate
6: Lock nut tightening torque: not exceeding 10.5 Nm
7: Connections to DIN 24340 from A10; valve fixing screws M6x35 DIN 912-10.9 tightening torque 12~15 Nm
8: O-ring AS568-014 (Hs90)
9: Plug for valves with 1 solenoid
10: Coil removable length

DG05- ∗C-D ∗-WB-71
∗N

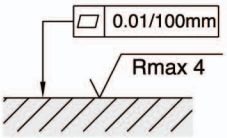

Required surface finish of mating piece when fitting the valve without subplate.

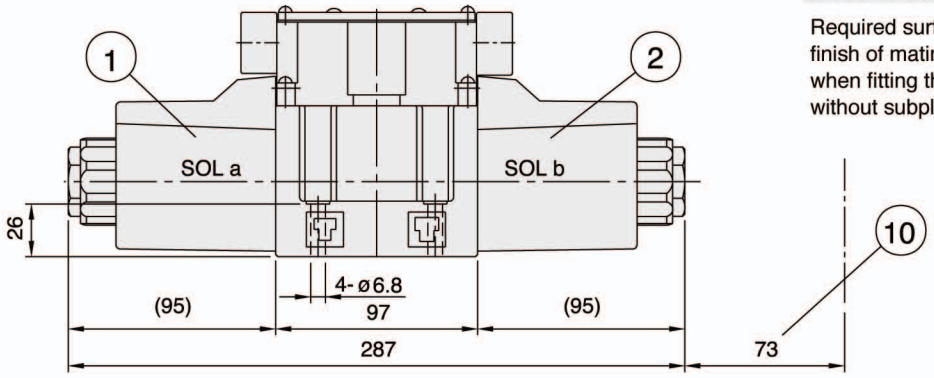

Ordering code : EDG03 Size 6

D	G	03	-	2C	-	A1	-	DN	-	70	-	* *
1	2	3		4 5		6		7		8		9

1 Directional Control Valve

2 Manifold or Subplate Mounting

3 Nominal Valve Size

- Nominal valve size: NG 6, CETOP 3 and ISO 4401-03.

4 Type Of Spool (Center Condition)

- 0: Open center (all ports).
- 1: Open center (P, A to T).
- 2: Closed center (all ports).
- 3: Closed center (P, B).
- 6: Closed center (P only).
- 7: Open center (P to A, B).
- 8: Tandem center (P to T).
- 11: Open center (P, B to T).
- 22: Closed center (two way).
- 31: Closed center (P, A).
- 33: Closed center (bleed AB).

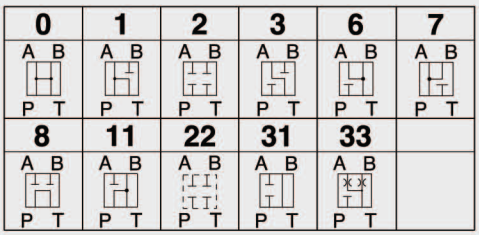

5 Spring Arrangement

- A: Spring offset to port "A" single solenoid.
- B: Spring centered-single solenoid.
- C: Spring centered-double solenoid.
- N: Without spring with detent.
- F: Spring offset-shift to center-single solenoid.

6 Electric Power Source Indication

- A1: AC110V, 50Hz/AC120V, 60Hz;
- A2: AC220V, 50Hz/AC240V, 60Hz;
- D1: DC12V;
- D2: DC24V;
- R1: AC110V,50/60Hz; Rectifier built-in type.
- R2: AC220V, 50/60Hz; Rectifier built-in type.

7 Electrical Options

- DN: DIN 43650 Coils.
- WB: Wiring housing with G1/2 thread and indicator lights.

8 Design Number

- 70: Without indicator lights.
- 71: With indicator lights.
- 72: Without angled plug but with cap.

9 Optional Inquiry

Subplate dimensions : EDG05 Size 10

Bottom connection

DGSP-05 ∗ - ∗

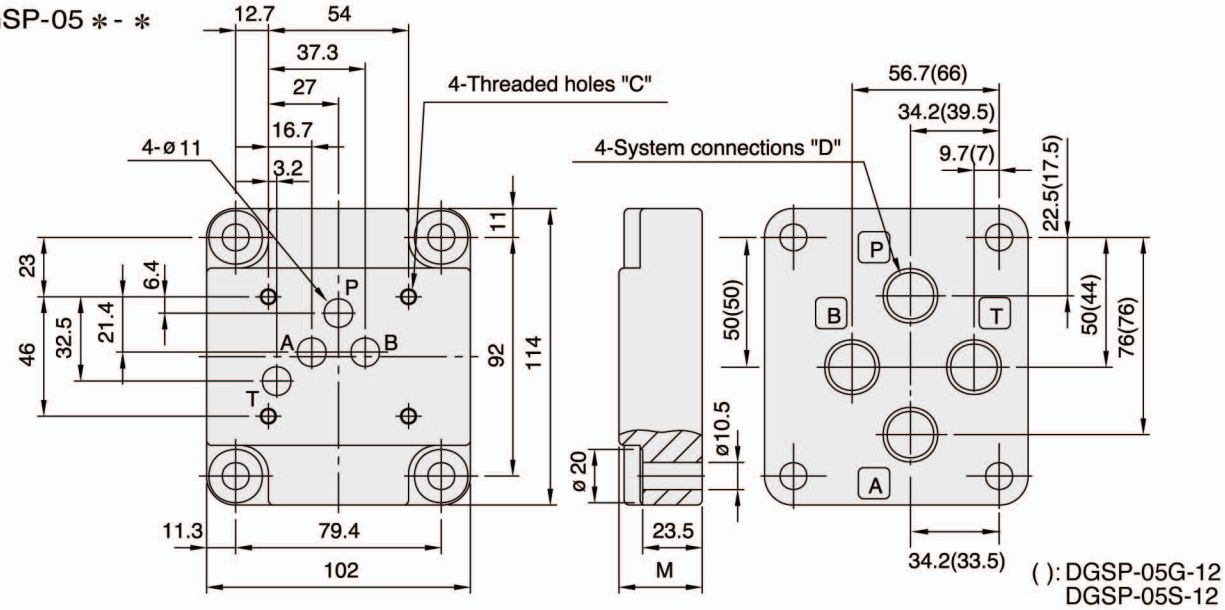

Model	C	D	M	Weight
DGSP-05-8	M5x14 Deep(min) full thread depth	1/2"Rc	32	2.1Kg
DGSP-05-12		3/4"Rc	38	2.4Kg
DGSP-05G-8		1/2"BSP	32	2.1Kg
DGSP-05G-12		3/4"BSP	38	2.4Kg

Model	C	D	M	Weight
DGSP-05N-8	1/4"-20UNC-2B Thd.x1/2" Deep full thread depth	1/2"NPT	32	2.1Kg
DGSP-05N-12		3/4"NPT	38	2.4Kg
DGSP-05S-8		1/2"SAE	32	2.1Kg
DGSP-05S-12		3/4"SAE	38	2.4Kg

Side connection

DGSP-05 ∗ - ∗E

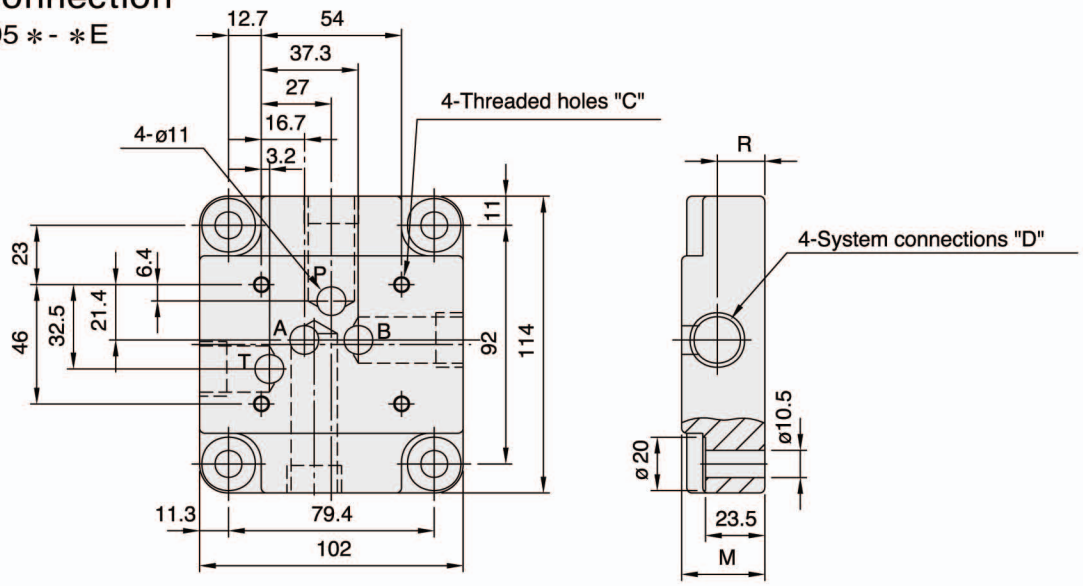

Model	C	D	M	R	Weight
DGSP-05-8E	M6x14 Deep(min) full thread depth	1/2"Rc	32	16	2.1Kg
DGSP-05-12E		3/4"Rc	38	18	2.4Kg
DGSP-05G-8E		1/2"BSP	32	16	2.1Kg
DGSP-05G-12E		3/4"BSP	38	18	2.4Kg

Model	C	D	M	R	Weight
DGSP-05N-8E	1/4"-20UNC-2B Thd.x1/2" Deep full thread depth	1/2"NPT	32	16	2.1Kg
DGSP-05N-12E		3/4"NPT	38	18	2.4Kg
DGSP-05S-8E		1/2"SAE	32	16	2.1Kg
DGSP-05S-12E		3/4"SAE	38	18	2.4Kg

EDG07 Size 16

Characteristics :

- Highest performance in NG 16.
- Optimized spool design to reduce flow force.
- Proven quality through 10 million endurance test.
- Manual overrides standard.
- "P" port pilot pressure insert for open center spools.
- Connections to DIN, ISO and CETOP.

Graphic symbol :

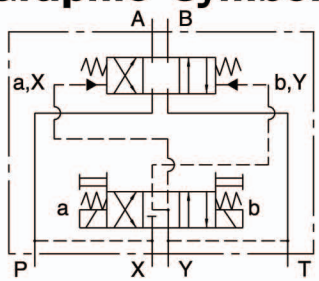

DG07-E- ∗C-T- ∗- ∗- ∗

Specification :

Maximum flow		300 l/min {79 GPM}
Maximum operating pressure		320 bar {4500 PSI}
Maximum permissible back pressure		160 bar {2285 PSI}
Pilot pressure		12~250bar
Ambient temperature range		-15˚C~50˚C
Hydraulic fluid temperature		-15˚C~70˚C
Viscosity range		15~400mm²/s
Hydraulic oil		ISO VG 32,46,68
Fluid cleanliness		NAS Class 9 MAX.
Maximum change over frequency		120 times/min
Mounting pattern		ISO 4401-AD-07-4-A
Weight (Valve with hydraulic operation)		7.3kg
Valve fixing screws	Matrix	M6x55L x2pcs.
		M10x50L x4pcs.
	Inch	1/4"~20UNCx2-1/4"L x2pcs
		3/8"~16UNCx2"L x4pcs
Tightening torque		12~15 Nm(M6)
		58~72 Nm(M10)

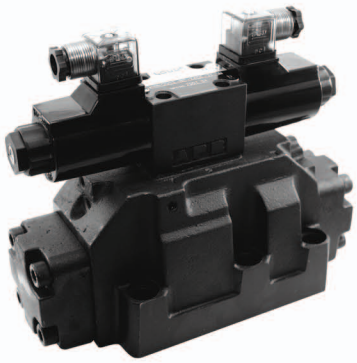

Model: DG07-E-2C-T-D2-DN-70

Model: DG07-E-2A-T-D2-DN-70

Cross section diagram :

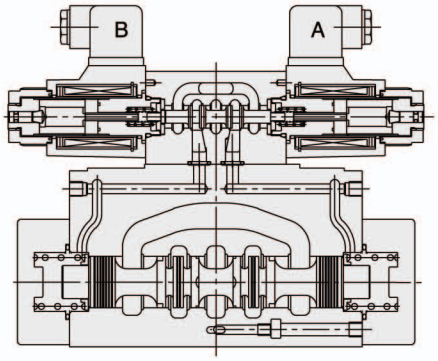

DG07-E-2C-T-A ∗-DN-70

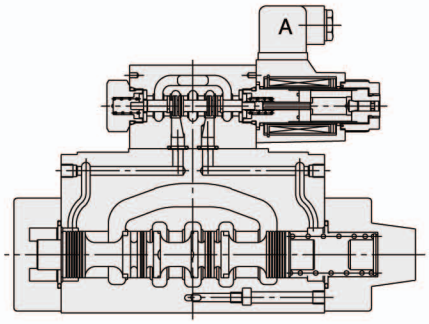

DG07-E-2A-A ∗-DN-70

Ordering code : EDG07 Size 16

D	G	07	-	E	-	2	C	-	E	T	-	A1	-	DN	-	70	-	* *
1	2	3		4		5	6		7	8		9		10		11		12

1 Directional Control Valve

2 Manifold or Subplate Mounting

3 Nominal valve size

- Nominal valve size: NG 16,CETOP 7 and ISO 4401-07.

4 Operator

- No code: Hydraulic (pilot) operation.
- E: Electro-hydraulic operation.

5 Type of Spool(Center Condition)

- 0: Open center(all ports).
- 1: Open center(P,A to T).
- 2: Closed center(all ports).
- 3: Closed center(P,B).
- 6: Closed center(P only).
- 7: Open center(P to A,B).
- 8: Tandem center(P to T).
- 11: Open center(P,B to T).
- 22: Closed center(two way).
- 31: Closed center(P,A).
- 33: Closed center(bleed A,B).

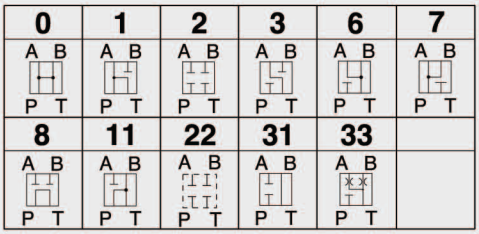

6 Spring Arrangement

- A: Spring offset.
- B: Spring centered with solenoid "A" removed.
- C: Spring centered.
- N: Without spring with detent. (pilot only).
- F: Spring offset-shift to center.

7 External Pilot Pressure

- No code: Internal pilot.
- E: External pilot.

8 Internal Pilot Drain

- No code: External drain.
- T: Internal drain.

9 Coil Identification

- A1: AC110V,50Hz/AC120V,60Hz;
- A2: AC220V,50Hz/AC240V,60Hz;
- D1: DC12V;
- D2: DC24V;;
- R1: AC110V,50/60Hz;Rectifier built-in type.
- R2: AC220V,50/60Hz;Rectifier built-in type.

10 Electrical Options

- DN: DIN 43650 Coils.
- WB: Wiring housing with G1/2 thread and indicator lights.

11 Design Number

- 70: Without indicator lights.
- 71: With indicator lights.
- 72: Without angled plug but with cap.

12 Optional Inquiry

- S: Stroke adjustment.
- P: With P port check valve.

Spool types : EDG07 Size 16

Position type at neutral	Double solenoid valves, spring centered -C-	Single solenoid valves, solenoid at port A end -B-	Single solenoid valves, solenoid at port B end -BL-
0	DG07-0C	DG07-0B	DG07-0BL
1	DG07-1C	DG07-1B	DG07-1BL
2	DG07-2C	DG07-2B	DG07-2BL
3	DG07-3C	DG07-3B	DG07-3BL
6	DG07-6C	DG07-6B	DG07-6BL
7	DG07-7C	DG07-7B	DG07-7BL
8	DG07-8C	DG07-8B	DG07-8BL
11	DG07-11C	DG07-11B	DG07-11BL
31	DG07-31C	DG07-31B	DG07-31BL
33	DG07-33C	DG07-33B	DG07-33BL

Spool types : EDG07 Size 16

Position type at neutral	Single solenoid valves, solenoid at port A end -A-	Single solenoid valves, solenoid at port A end -AL-
0	DG07-0A	DG07-0AL
2	DG07-2A	DG07-2AL
22	DG07-22A	DG07-22AL
6	DG07-6A	DG07-6AL
7	DG07-7A	DG07-7AL

P port insert check valve drawing:

DG07-E ∗- ∗- ∗- ∗-70-P

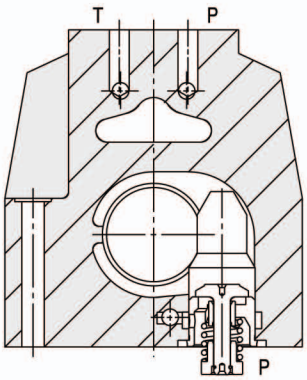

Installation dimensions :

Mounting Surface: ISO 4401-AD-07-4-A

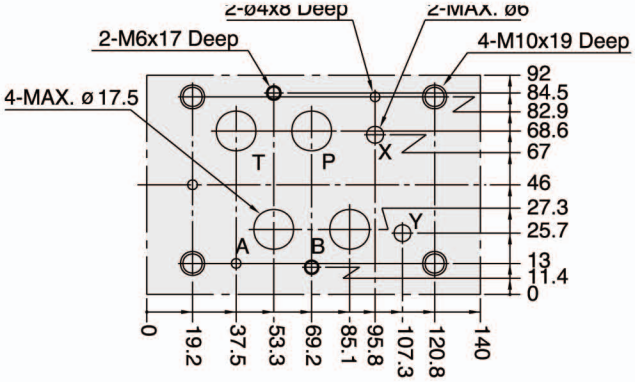

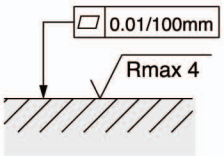

Required surface finish of mating piece when fitting the valve without subplate.

DG-07

Performance curves : EDG07 Size 16

(Viscosity of Hydraulic Fluid: 41 mm²/s)

Spool Type	PRESSURE DROP CHARACTERISTICS				
	P→A	P→B	A→T	B→T	P→T
0C	a-b	a-b	a-b	a-b	a-b
1C	a-b	a-b	a-b	a-b	a-b
2C	1	1	2	3	-
3C	a-b	a-b	a-b	a-b	a-b
6C	a-b	a-b	a-b	a-b	a-b
7C	a-b	a-b	a-b	a-b	a-b
8C	4	5	7	8	6
11C	a-b	a-b	a-b	a-b	a-b
31C	a-b	a-b	a-b	a-b	a-b
33C	a-b	a-b	a-b	a-b	a-b
0A	a-b	a-b	a-b	a-b	a-b
2A	1	1	2	3	-

DG07-2C- ∗- ∗-70

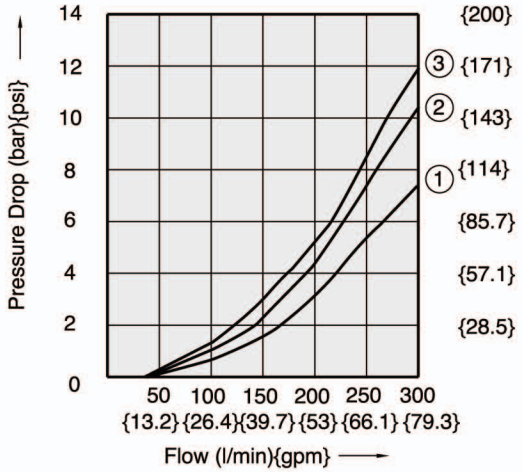

DG07-8C- ∗- ∗-70

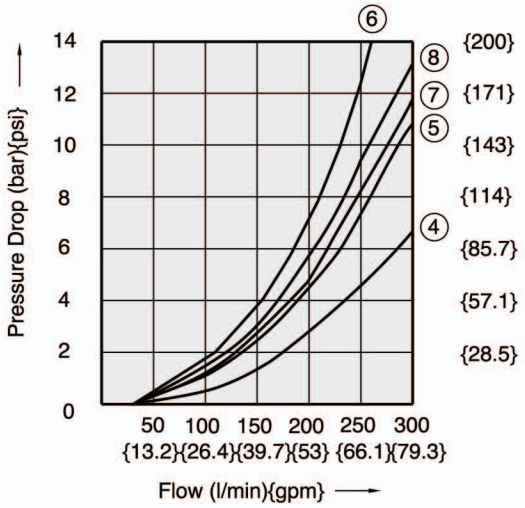

All other spools

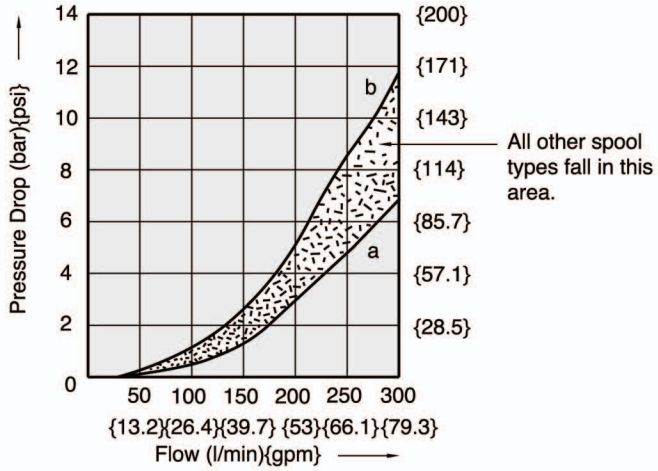

Stroke adjustment :

DG07-E- ∗- ∗- ∗-70-S

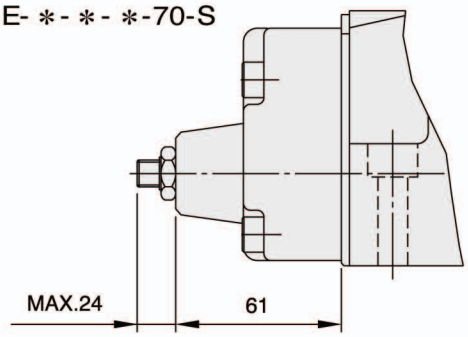

Dimensions : EDG07 Size 16

DG07-E-2A-T- ∗-∗-∗
(∗A)

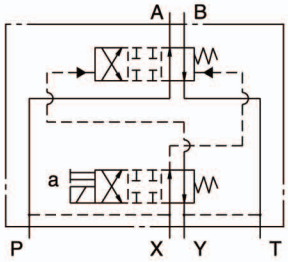

DG07-E-2AL-T- ∗-∗-∗
(∗AL)

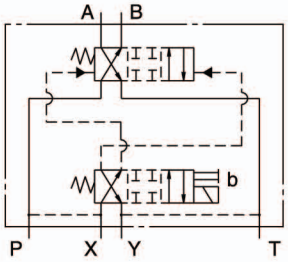

DG07-E- ∗C-T- ∗-∗-∗

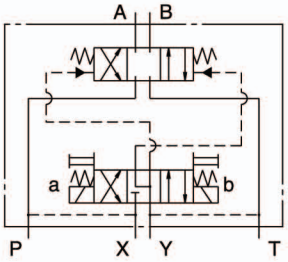

DG07-E-2B-T- ∗-∗-∗
(∗B)

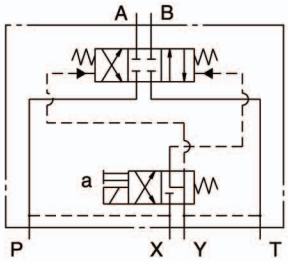

DG07-E-2BL-T- ∗-∗-∗
(∗BL)

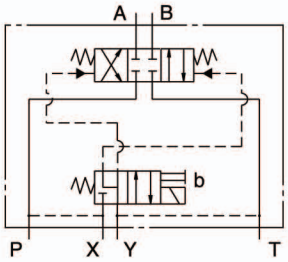

DG07-E-2N-T- ∗-∗-∗

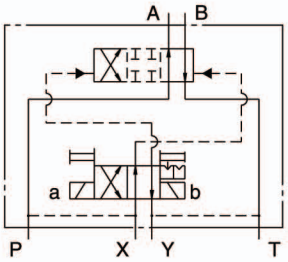

DG07-E- ∗A-A ∗-DN-70
∗B

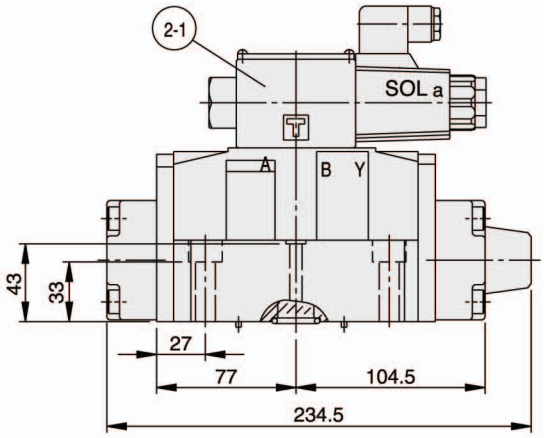

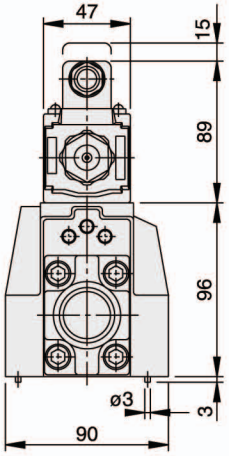

DG07-E- ∗AL-A ∗-DN-70
∗BL

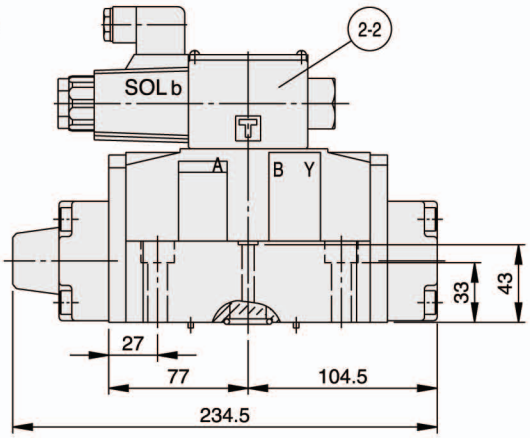

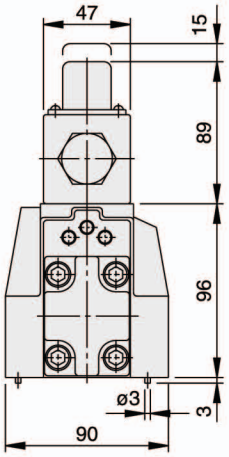

Subplate dimensions : EDG07 Size 16

Bottom connection

DGSP-07 ∗ - ∗

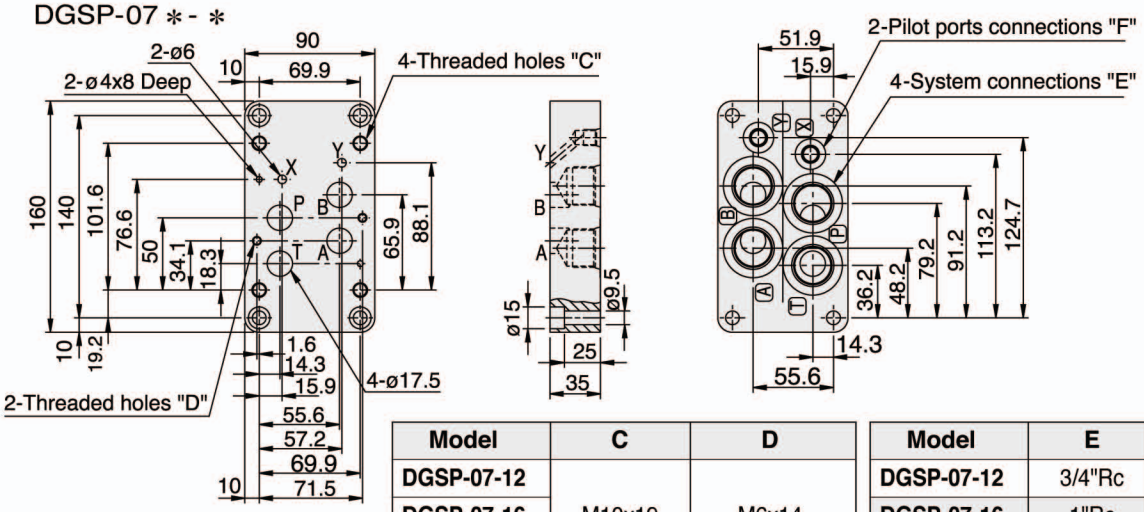

Model	C	D
DGSP-07-12	M10x19 Deep(min)	M6x14 Deep(min)
DGSP-07-16		
DGSP-07G-12		
DGSP-07G-16		
DGSP-07N-12	3/8"-16 UNC-2B	1/4"-20 UNC-2B
DGSP-07N-16		
DGSP-07S-12	Thd. x3/4" Deep	Thd. x9/16" Deep
DGSP-07S-16		

Model	E	F	Weight
DGSP-07-12	3/4"Rc	1/4"Rc	2.8Kg
DGSP-07-16	1"Rc	1/4"Rc	2.8Kg
DGSP-07G-12	3/4"BSP	1/4"BSP	2.8Kg
DGSP-07G-16	1"BSP	1/4"BSP	2.8Kg
DGSP-07N-12	3/4"NPT	1/4"NPT	2.8Kg
DGSP-07N-16	1"NPT	1/4"NPT	2.8Kg
DGSP-07S-12	3/4"SAE	1/4"SAE	2.8Kg
DGSP-07S-16	1"SAE	1/4"SAE	2.8Kg

Side connection

DGSP-07 ∗ - ∗E

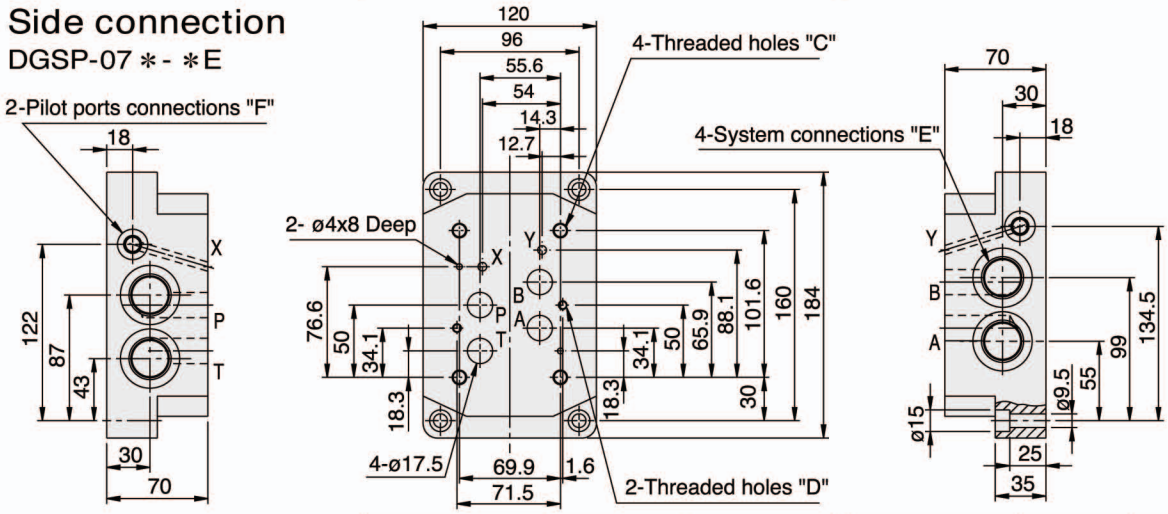

Model	C	D
DGSP-07-12E	M10x19 Deep(min)	M6x14 Deep(min)
DGSP-07-16E		
DGSP-07G-12E		
DGSP-07G-16E		
DGSP-07N-12E	3/8"-16 UNC-2B	1/4"-20 UNC-2B
DGSP-07N-16E		
DGSP-07S-12E	Thd. x3/4" Deep	Thd. x9/16" Deep
DGSP-07S-16E		

Model	E	F	Weight
DGSP-07-12E	3/4"Rc	1/4"Rc	3.8Kg
DGSP-07-16E	1"Rc	1/4"Rc	3.8Kg
DGSP-07G-12E	3/4"BSP	1/4"BSP	3.8Kg
DGSP-07G-16E	1"BSP	1/4"BSP	3.8Kg
DGSP-07N-12E	3/4"NPT	1/4"NPT	3.8Kg
DGSP-07N-16E	1"NPT	1/4"NPT	3.8Kg
DGSP-07S-12E	3/4"SAE	1/4"SAE	3.8Kg
DGSP-07S-16E	1"SAE	1/4"SAE	3.8Kg

Spool types : EDG03 Size 6

Position type at neutral	Double solenoid valves, spring centered -C-	Single solenoid valves, solenoid at port A end -B-	Single solenoid valves, solenoid at port B end -BL-
0	DG03-0C	DG03-0B	DG03-0BL
1	DG03-1C	DG03-1B	DG03-1BL
2	DG03-2C	DG03-2B	DG03-2BL
		DG03-2F	DG03-2FL
3	DG03-3C	DG03-3B	DG03-3BL
6	DG03-6C	DG03-6B	DG03-6BL
7	DG03-7C	DG03-7B	DG03-7BL
8	DG03-8C	DG03-8B	DG03-8BL
11	DG03-11C	DG03-11B	DG03-11BL
31	DG03-31C	DG03-31B	DG03-31BL
33	DG03-33C	DG03-33B	DG03-33BL

Ordering code : EDG08 Size 22

D	G	08	-	E	-	2	C	-	E	T	-	A1	-	DN	-	70	-	* *
1	2	3		4		5	6		7	8		9		10		11		12

1 Directional Control Valve

2 Manifold or Subplate Mounting

3 Nominal valve size

- Nominal valve size: NG 22,CETOP 8 and ISO 4401-08.

4 Operator

- No code: Hydraulic (pilot) operation.
- E: Electro-hydraulic operation.

5 Type of Spool(Center Condition)

- 0: Open center(all ports).
- 1: Open center(P,A to T).
- 2: Closed center(all ports).
- 3: Closed center(P,B).
- 6: Closed center(P only).
- 7: Open center(P to A,B).
- 8: Tandem center(P to T).
- 11: Open center(P,B to T).
- 22: Closed center(two way).
- 31: Closed center(P,A).
- 33: Closed center(bleed A,B).

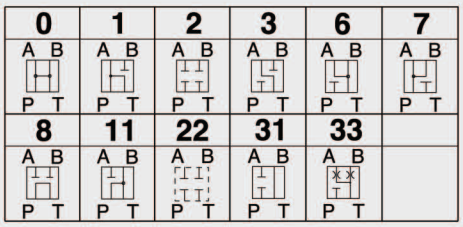

6 Spring Arrangement

- A: Spring offset.
- B: Spring centered with solenoid "A" removed.
- C: Spring centered.
- F: Spring offset-shift to center.
- N: Without spring with detent. (pilot only).

7 External Pilot Pressure

- No code: Internal pilot.
- E: External pilot.

8 Internal Pilot Drain

- No code: External drain.
- T: Internal drain.

9 Coil Identification

- A1: AC110V,50Hz/AC120V,60Hz;
- A2: AC220V,50Hz/AC240V,60Hz;
- D1: DC12V;
- D2: DC24V;;
- R1: AC110V,50/60Hz; Rectifier built-in type.
- R2: AC220V,50/60Hz; Rectifier built-in type.

10 Electrical Options

- DN: DIN 43650 Coils.
- WB: Wiring housing with G1/2 thread and indicator lights.

11 Design Number

- 70: Without indicator lights.
- 71: With indicator lights.
- 72: Without angled plug but with cap.

12 Optional Inquiry

- S: Stroke adjustment.
- P: With P port check valve.

Spool types : EDG08 Size 22

Position type at neutral	Double solenoid valves, spring centered -C-	Single solenoid valves, solenoid at port A end -B-	Single solenoid valves, solenoid at port B end -BL-
0	DG08-0C	DG08-0B	DG08-0BL
1	DG08-1C	DG08-1B	DG08-1BL
2	DG08-2C	DG08-2B	DG08-2BL
3	DG08-3C	DG08-3B	DG08-3BL
6	DG08-6C	DG08-6B	DG08-6BL
7	DG08-7C	DG08-7B	DG08-7BL
8	DG08-8C	DG08-8B	DG08-8BL
11	DG08-11C	DG08-11B	DG08-11BL
31	DG08-31C	DG08-31B	DG08-31BL
33	DG08-33C	DG08-33B	DG08-33BL

Spool types :

EDG08 **Size 22**

Position type at neutral	Single solenoid valves, solenoid at port A end -A-	Single solenoid valves, solenoid at port A end -AL-
0	DG08-0A 	DG08-0AL 
2	DG08-2A 	DG08-2AL 
6	DG08-6A 	DG08-6AL 
7	DG08-7A 	DG08-7AL 
22	DG08-22A 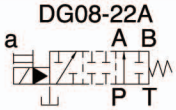	DG08-22AL 

P port insert check valve drawing:

DG08-E ∗- ∗- ∗- ∗-70-P

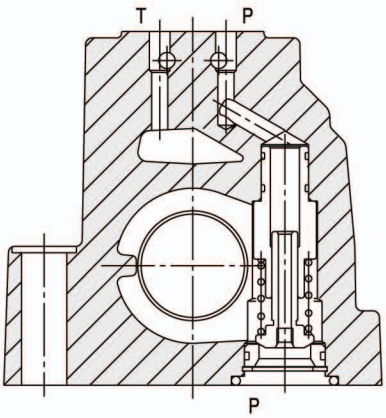

Installation dimensions :

Mounting Surface: ISO 4401-AE-08-4-A

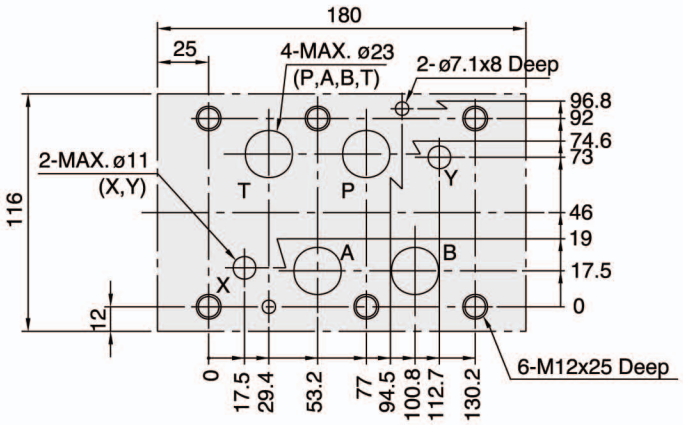

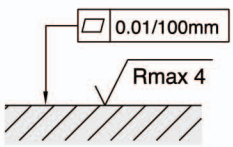

Required surface finish of mating piece when fitting the valve without subplate.

DG-08

Performance curves : EDG08 Size 22

(Viscosity of Hydraulic Fluid: 41 mm²/s)

Spool Type	PRESSURE DROP CHARACTERISTICS				
	P→A	P→B	A→T	B→T	P→T
0C	2	2	1	3	2
1C	1	2	1	2	4
2C	2	2	1	4	-
3C	2	2	1	2	-
6C	2	2	1	3	-
7C	2	2	1	4	-
8C	2	2	2	4	6
11C	2	2	1	4	6
31C	2	2	1	4	-
33C	2	2	1	3	-
0A	2	2	1	3	-
2A	2	2	1	4	-

DG08- ∗-A ∗- ∗-70

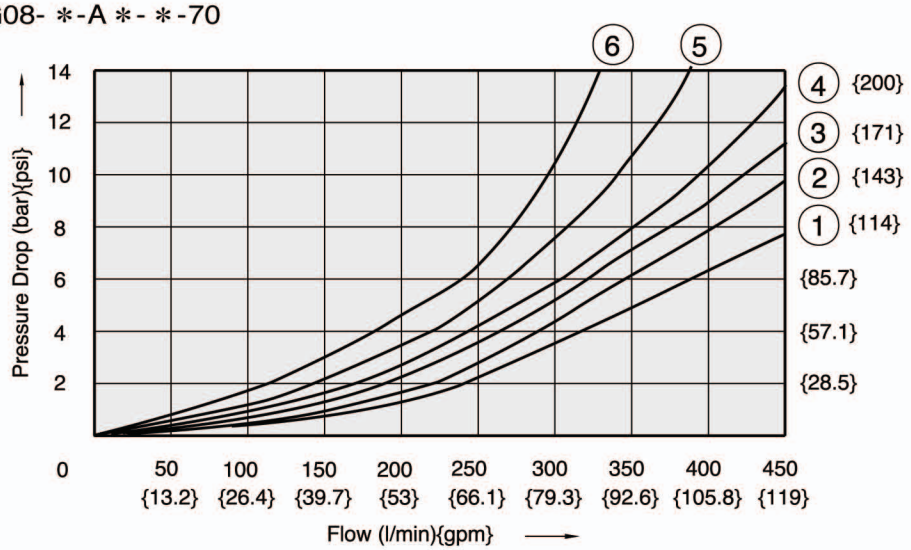

Stroke adjustment :

DG08-E- ∗- ∗- ∗-70-S

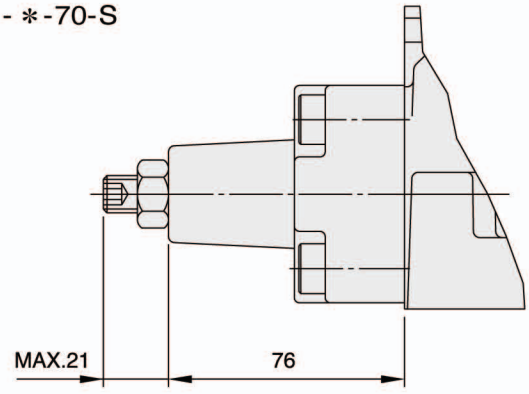

Dimensions : EDG08 Size 22

DG08-E-2A-T- ∗-∗-∗
(∗A)

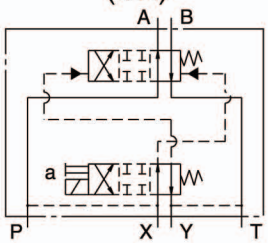

DG08-E-2AL-T- ∗-∗-∗
(∗AL)

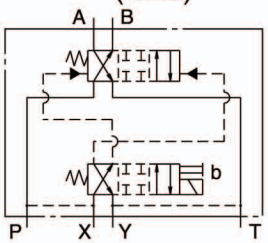

DG08-E- ∗C-T- ∗-∗-∗

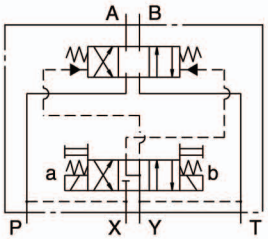

DG08-E-2B-T- ∗-∗-∗
(∗B)

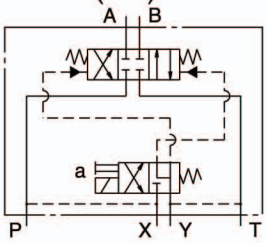

DG08-E-2BL-T- ∗-∗-∗
(∗BL)

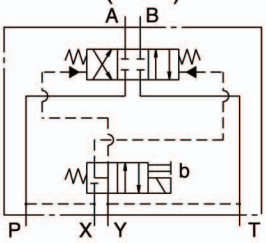

DG08-E-2N-T- ∗-∗-∗
(∗N)

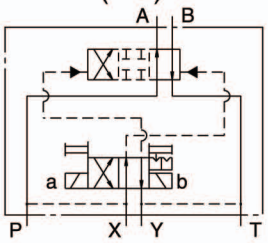

DG08-E- ∗A-A ∗-DN-70
∗B

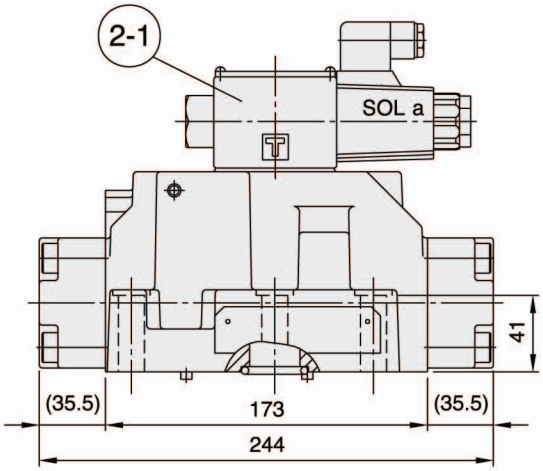

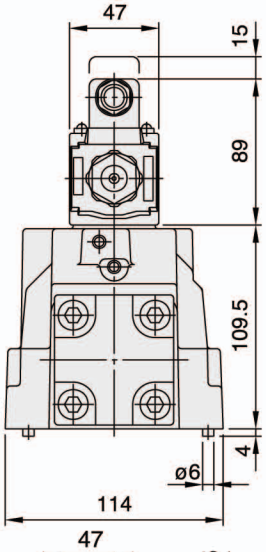

DG08-E- ∗AL-A ∗-DN-70
∗BL

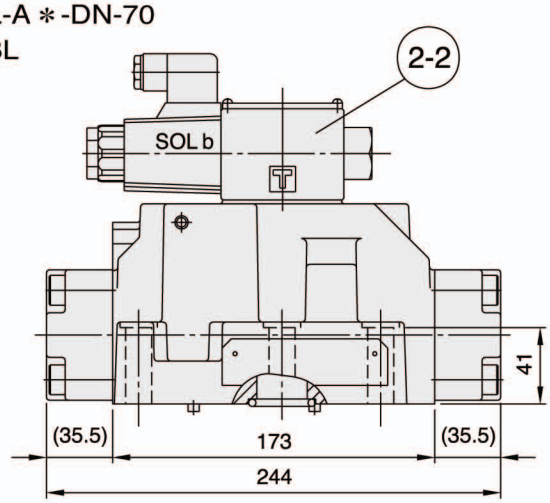

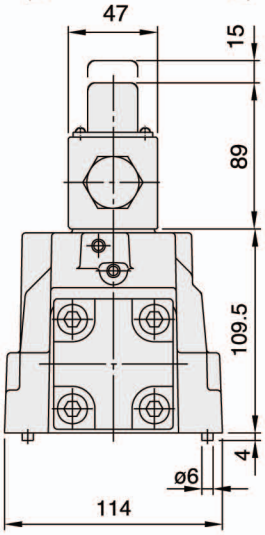

DG-08

Dimensions : EDG08 Size 22

DG08-E- ∗C-A ∗-DN-70

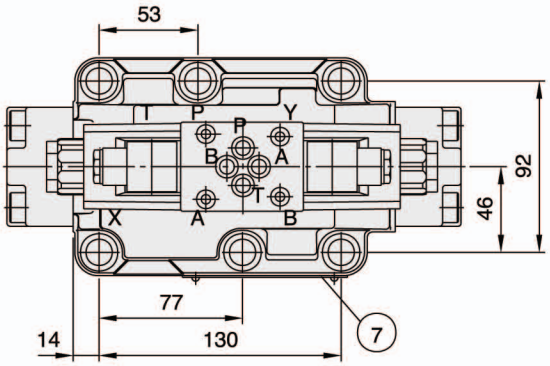

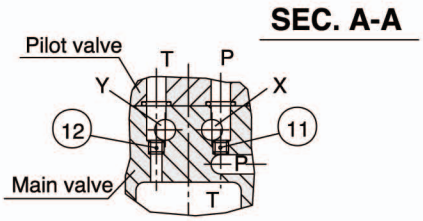

Pilot oil feed (plug: M6x8L)
external: 11 plugged
internal: 11 open
Pilot oil drain(plug: M6x8L)
external: 12 plugged
internal: 12 open

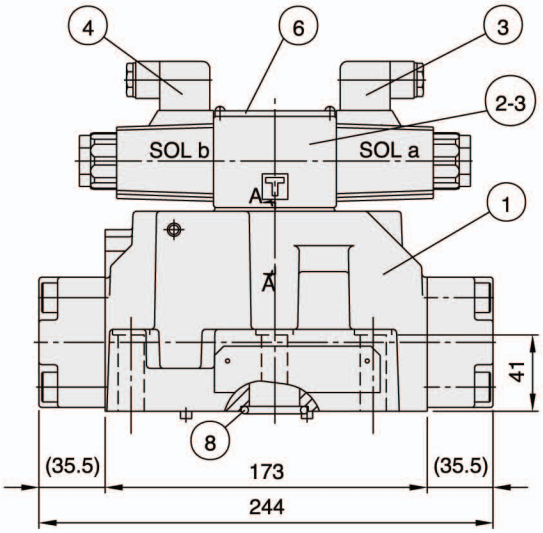

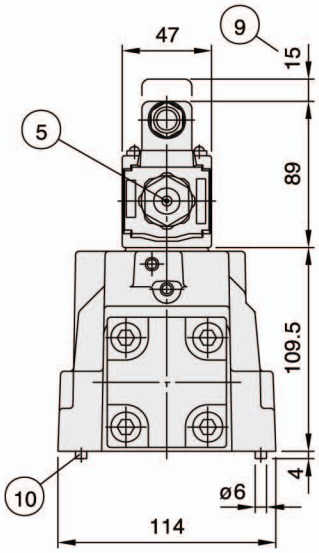

1: Main valve

2: Pilot valve

2-1. Pilot valve DG03-2A- ∗(1 solenoid) for main valves with spools ∗A, (3 position valve with solenoid on side a)

Pilot valve DG03-6B- ∗(1 solenoid) for main valves with spools ∗B, (3 position valve with solenoid on side a)

2-2. Pilot valve DG03-2AL- ∗(1 solenoid) for main valves with spools ∗AL,(3 position valve with solenoid on side b)

Pilot valve DG03-6BL- ∗(1 solenoid) for main valves with spools ∗BL,(3 position valve with solenoid on side b)

2-3. Pilot valve DG03-6C- ∗(2 solenoid) for main valves with 3 positions

3: Solenoid a, colour of plug: grey

4: Solenoid b, colour of plug: black

5: Push pin for manual operation

6: Nameplate for pilot valve

7: Nameplate for whole valve

8: O-ring: Ports A,B,P,T: AS568-215 (NBR, Hs90); Ports X,Y: AS568-210 (NBR, Hs90)

9: Space required to remove plug

10: Locating pin

Subplate dimensions : EDG08 Size 22

Bottom connection
DGSP-08 ∗ - ∗

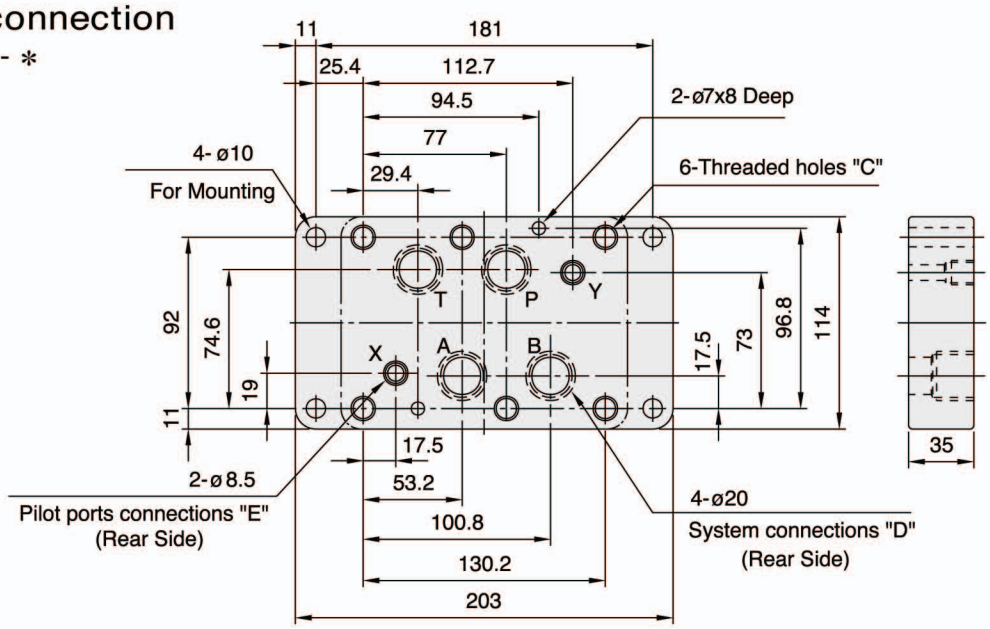

Model	C	D	E	Weight
DGSP-08-12	M12x25 Deep(min) full thread depth	3/4"Rc	1/4"Rc	4.8Kg
DGSP-08-16		1"Rc	1/4"Rc	4.8Kg
DGSP-08G-12		3/4"BSP	1/4"BSP	4.8Kg
DGSP-08G-16		1"BSP	1/4"BSP	4.8Kg

Model	C	D	E	Weight
DGSP-08N-12	1/2"-13UNC-2B Thd.x1" Deep full thread depth	3/4"NPT	1/4"NPT	4.8Kg
DGSP-08N-16		1"NPT	1/4"NPT	4.8Kg
DGSP-08S-12		3/4"SAE	1/4"SAE	4.8Kg
DGSP-08S-16		1"SAE	1/4"SAE	4.8Kg

Side connection
DGSP-08 ∗ - ∗E

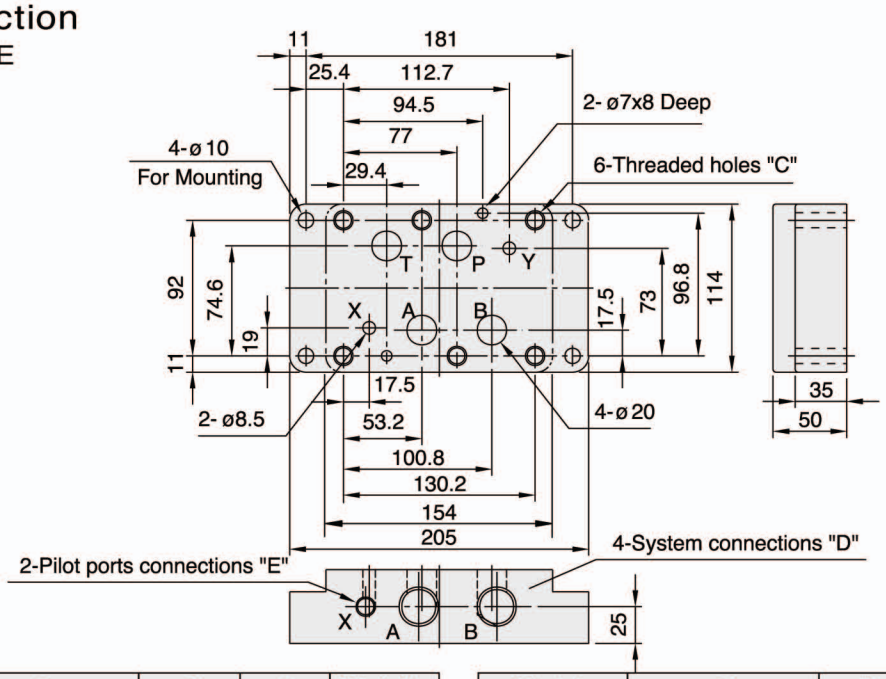

Model	C	D	E	Weight
DGSP-08-12E	M12x25 Deep(min) full thread depth	3/4"Rc	1/4"Rc	6.4Kg
DGSP-08-16E		1"Rc	1/4"Rc	6.4Kg
DGSP-08G-12E		3/4"BSP	1/4"BSP	6.4Kg
DGSP-08G-16E		1"BSP	1/4"BSP	6.4Kg

Model	C	D	E	Weight
DGSP-08N-12E	1/2"-13UNC-2B Thd.x1" Deep full thread depth	3/4"NPT	1/4"NPT	6.4Kg
DGSP-08N-16E		1"NPT	1/4"NPT	6.4Kg
DGSP-08S-12E		3/4"SAE	1/4"SAE	6.4Kg
DGSP-08S-16E		1"SAE	1/4"SAE	6.4Kg

EDG08H Size 25

Characteristics :

- Highest performance in NG 25.
- Optimized spool design to reduce flow force.
- Proven quality through 10 million endurance test.
- Manual overrides standard.
- "P" port pilot pressure insert for open center spools.
- Connections to DIN, ISO and CETOP.

Graphic symbol :

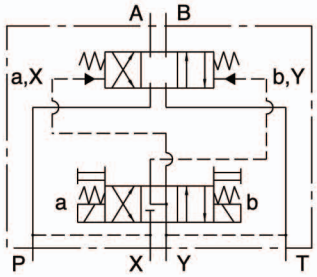

DG08H-E- ∗C-T- ∗- ∗- ∗

Specification :

Maximum flow		700 l/min {79 GPM}
Maximum operating pressure		320 bar {4500 PSI}
Maximum permissible back pressure		160 bar {2285 PSI}
Pilot pressure		13~250 bar
Ambient temperature range		-15˚C~50˚C
Hydraulic fluid temperature		-15˚C~70˚C
Viscosity range		15~400mm²/s
Hydraulic oil		ISO VG 32,46,68
Fluid cleanliness		NAS Class 9 MAX.
Maximum change over frequency		120 times/min
Mounting pattern		ISO 4401-AE-08-4-A
Weight (Valve with hydraulic operation)		17 kg
Valve fixing screws	Matrix	M12x60L x6pcs.
	Inch	1/2"~13UNCx2-1/4"L x6pcs
Tightening torque		100~122.5 Nm(M6)

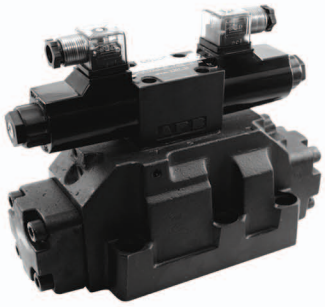

Model: DG08H-E-2C-T-D2-DN-70

Model: DG08H-E-2A-T-D2-DN-70

Cross section diagram :

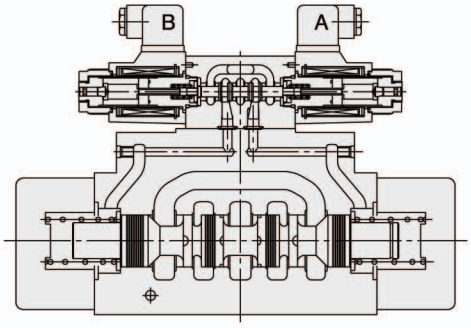

DG08H-E-2C-T-A ∗-DN-70

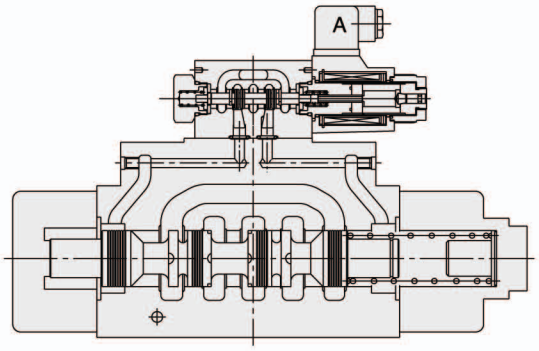

DG08H-E-2A-T-A ∗-DN-70

Ordering code : EDG08H Size 25

D	G	08	H	-	E	-	2	C	-	E	T	-	A1	-	DN	-	70	-	* *
1	2	3	4		5		6	7		8	9		10		11		12		13

1 Directional Control Valve

2 Manifold or Subplate Mounting

3 Nominal valve size

- Nominal valve size: NG 25,CETOP 8 and ISO 4401-08.

4 High flow

5 Operator

- No code: Hydraulic (pilot) operation.
- E: Electro-hydraulic operation.

6 Type of Spool(Center Condition)

- 0: Open center(all ports).
- 1: Open center(P,A to T).
- 2: Closed center(all ports).
- 3: Closed center(P,B).
- 6: Closed center(P only).
- 7: Open center(P to A,B).
- 8: Tandem center(P to T).
- 11: Open center(P,B to T).
- 22: Closed center(two way).
- 31: Closed center(P,A).
- 33: Closed center(bleed A,B).

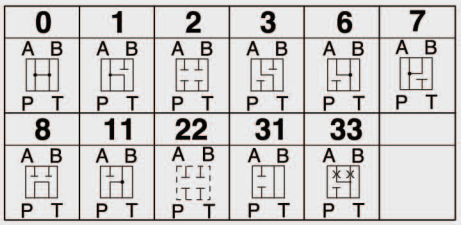

7 Spring Arrangement

- A: Spring offset.
- B: Spring centered with solenoid "A" removed.
- C: Spring centered.
- F: Spring offset-shift to center.
- N: Without spring with detent. (pilot only).

8 External Pilot Pressure

- No code: Internal pilot.
- E: External pilot.

9 Internal Pilot Drain

- No code: External drain.
- T: Internal drain.

10 Coil Identification

- A1: AC110V,50Hz/AC120V,60Hz;
- A2: AC220V,50Hz/AC240V,60Hz;
- D1: DC12V;
- D2: DC24V;;
- R1: AC110V,50/60Hz; Rectifier built-in type.
- R2: AC220V,50/60Hz; Rectifier built-in type.

11 Electrical Options

- DN: DIN 43650 Coils.
- WB: Wiring housing with G1/2 thread and indicator lights.

12 Design Number

- 70: Without indicator lights.
- 71: With indicator lights.
- 72: Without angled plug but with cap.

13 Optional Inquiry

- S: Stroke adjustment.
- P: With P port check valve.

Spool types : EDG08H Size 25

Position type at neutral	Double solenoid valves, spring centered -C-	Single solenoid valves, solenoid at port A end -B-	Single solenoid valves, solenoid at port B end -BL-
0	DG08H-0C	DG08H-0B	DG08H-0BL
1	DG08H-1C	DG08H-1B	DG08H-1BL
2	DG08H-2C	DG08H-2B	DG08H-2BL
3	DG08H-3C	DG08H-3B	DG08H-3BL
6	DG08H-6C	DG08H-6B	DG08H-6BL
7	DG08H-7C	DG08H-7B	DG08H-7BL
8	DG08H-8C	DG08H-8B	DG08H-8BL
11	DG08H-11C	DG08H-11B	DG08H-11BL
31	DG08H-31C	DG08H-31B	DG08H-31BL
33	DG08H-33C	DG08H-33B	DG08H-33BL

Spool types : EDG03 Size 6

Position type during transition	Double solenoid valves, two-position (detented) -N-	Single solenoid valves, solenoid at port A end -A-	Single solenoid valves, solenoid at port B end -AL-
0		DG03-0A	DG03-0AL
2	DG03-2N	DG03-2A	DG03-2AL
6		DG03-6A	DG03-6AL
7		DG03-7A	DG03-7AL
22		DG03-22A	DG03-22AL

Features of electro-mangnetic coil :

Solenoid Classification	Power Source	Voltage (V)	Frequency (Hz)	Inrush Current (A)	Holding Current (A)	Holding Powert (W)	Permissible Voltage (%)	Insulation Grade	Coil Insulation Class	Insulation Resistance (MΩ)
AC	A1	110	50	1.6	0.47	23	+10,-15	B	H (180˚C)	>50
		120	60	1.5	0.42	24	+10,-15			
	A2	220	50	0.8	0.24	23	+10,-15			
		240	60	0.75	0.21	24	+10,-15			
DC	D1	12	-	-	2.4	29	+10,-10	B	H (180˚C)	
	D2	24	-	-	1.16	28	+10,-10			
RF	R1	AC110V,50/60Hz ↓ DC99V		-	0.33	30	+10,-10	B	H (180˚C)	
	R2	AC220V,50/60Hz ↓ DC198V		-	0.16	30	+10,-10			

EDG08H Size 25

Spool types :

Position type at neutral	Single solenoid valves, solenoid at port A end -A-	Single solenoid valves, solenoid at port A end -AL-
0	DG08H-0A	DG08H-0AL
2	DG08H-2A	DG08H-2AL
6	DG08H-6A	DG08H-6AL
7	DG08H-7A	DG08H-7AL
22	DG08H-22A	DG08H-22AL

P port insert check valve drawing:

DG08H-E ∗-∗-∗-∗-70-P

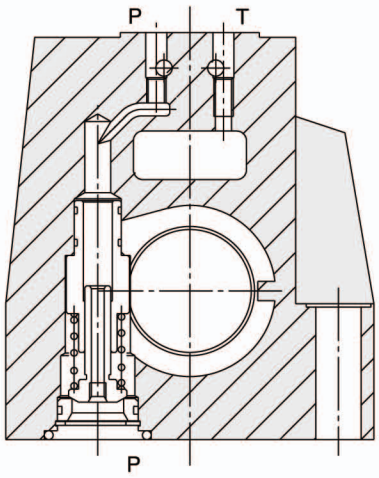

Installation dimensions :

Mounting Surface: ISO 4401-AE-08-4-A

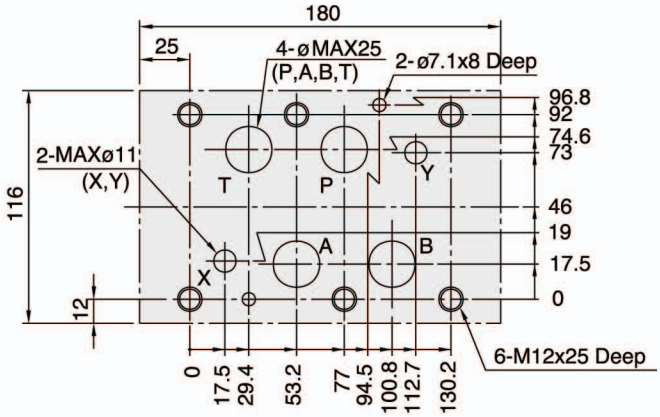

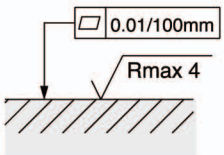

Required surface finish of mating piece when fitting the valve without subplate.

DG-08H

Performance curves : EDG08H Size 25

(Viscosity of Hydraulic Fluid: 41 mm²/s)

Spool Type	PRESSURE DROP CHARACTERISTICS				
	P→A	P→B	A→T	B→T	P→T
0C	4	4	3	4	-
1C	1	4	3	3	-
2C	1	1	1	3	-
3C	2	2	3	3	-
6C	2	2	3	5	-
7C	4	4	1	4	-
8C	3	1	2	4	7
11C	4	1	1	5	-
31C	2	1	1	6	-
33C	2	2	3	5	-

DG08- ∗-A ∗- ∗-70

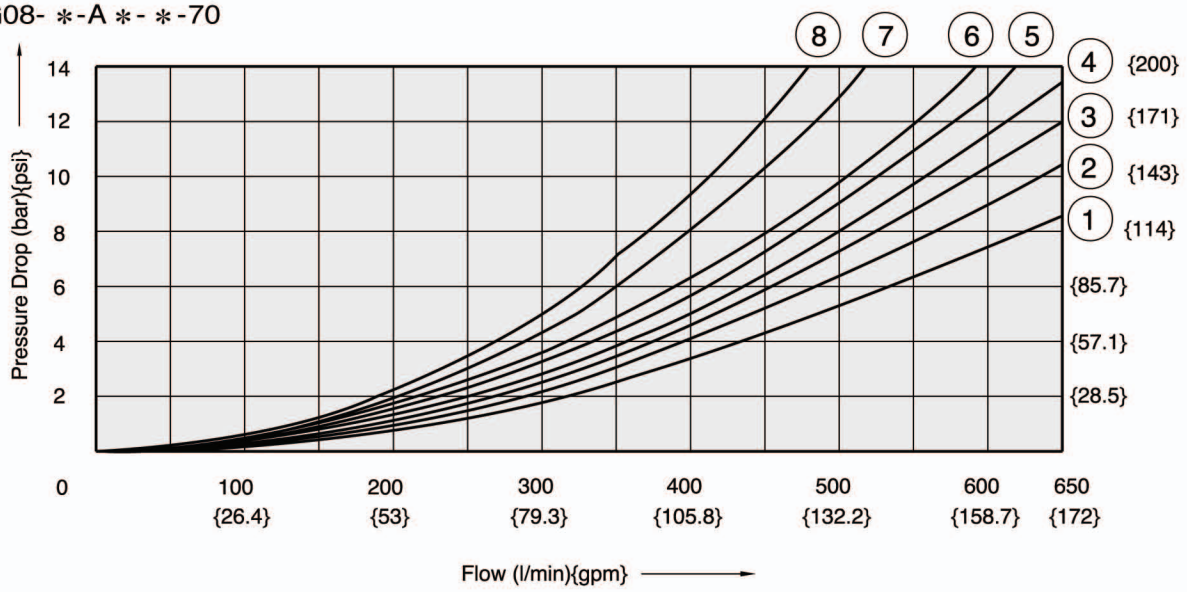

Dimensions : EDG08H Size 25

DG08H-E-2A-T- ∗-∗-∗
(∗A)

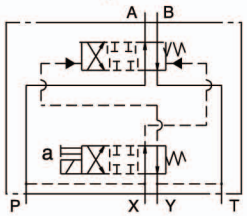

DG08H-E-2AL-T- ∗-∗-∗
(∗AL)

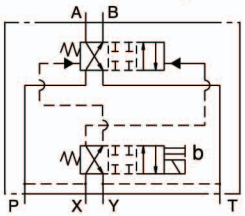

DG08H-E- ∗C-T- ∗-∗-∗

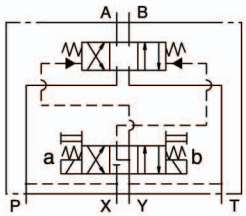

DG08H-E-2B-T- ∗-∗-∗
(∗B)

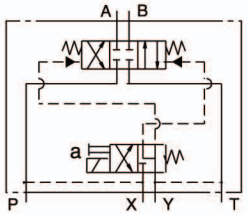

DG08H-E-2BL-T- ∗-∗-∗
(∗BL)

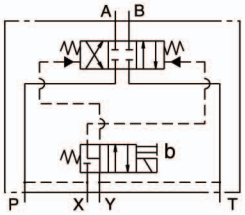

DG08H-E-2N-T- ∗-∗-∗
(∗N)

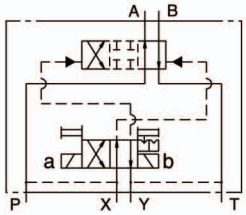

DG08H-E- ∗A-A ∗-DN-70
∗B

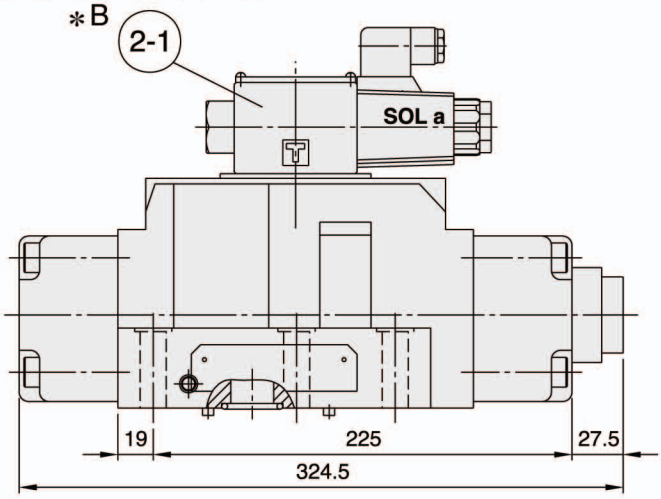

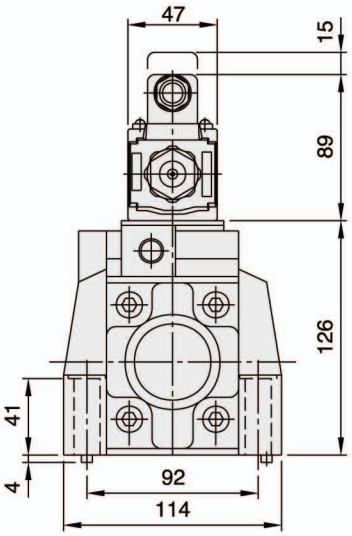

DG08H-E- ∗AL-A ∗-DN-70
∗BL

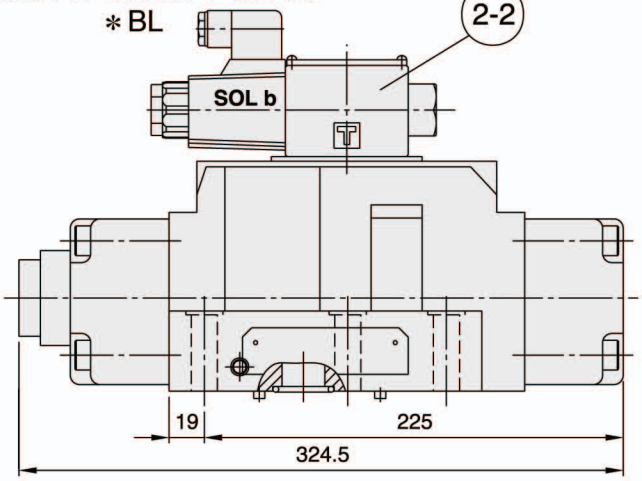

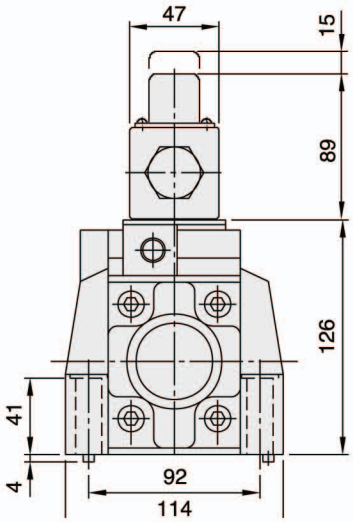

Dimensions : EDG08H Size 25

DG08H-E- ∗C-A ∗-DN-70

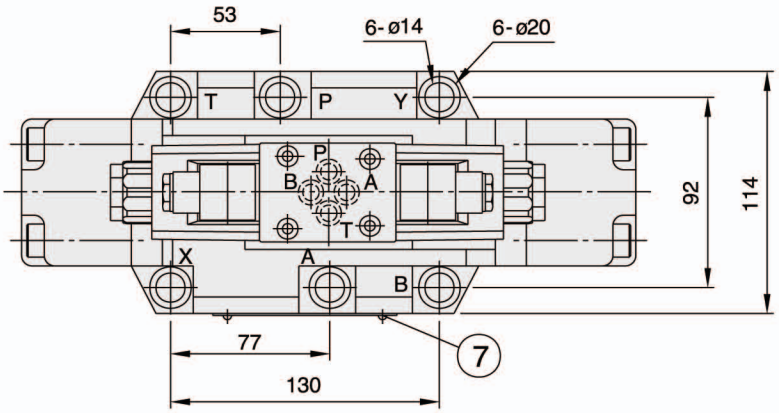

SEC. A-A

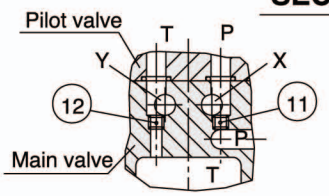

Pilot oil feed (plug: M6x8L)
external: 11 plugged
internal: 11 open
Pilot oil drain(plug: M6x8L)
external: 12 plugged
internal: 12 open

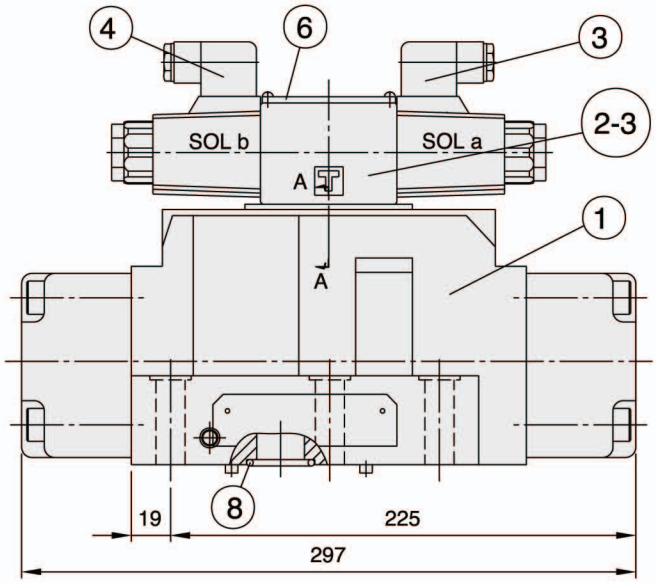

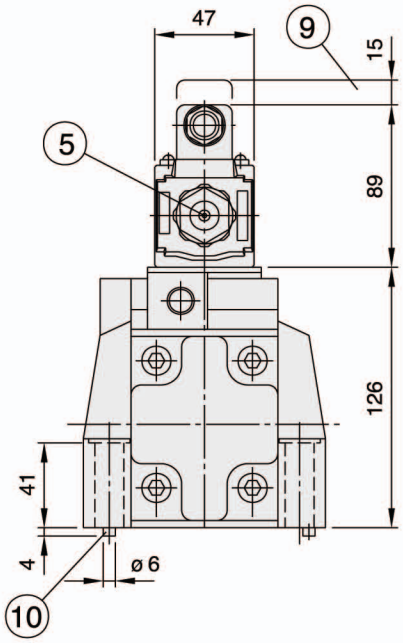

1: Main valve

2: Pilot valve

2-1. Pilot valve DG03-2A- ∗(1 solenoid) for main valves with spools ∗A, (3 position valve with solenoid on side a)

Pilot valve DG03-6B- ∗(1 solenoid) for main valves with spools ∗B, (3 position valve with solenoid on side a)

2-2. Pilot valve DG03-2AL- ∗(1 solenoid) for main valves with spools ∗AL,(3 position valve with solenoid on side b)

Pilot valve DG03-6BL- ∗(1 solenoid) for main valves with spools ∗BL,(3 position valve with solenoid on side b)

2-3. Pilot valve DG03-6C- ∗(2 solenoid) for main valves with 3 positions

3: Solenoid a, colour of plug: grey

4: Solenoid b, colour of plug: black

5: Push pin for manual operation

6: Nameplate for pilot valve

7: Nameplate for whole valve

8: O-ring: Ports A,B,P,T: AS568-215(NBR,Hs90);
Ports X,Y: AS568-210(NBR,Hs90)

9: Space required to remove plug

10: Locating pin

Subplate dimensions : EDG08H Size 25

Bottom connection

DGSP-08H ∗ - ∗

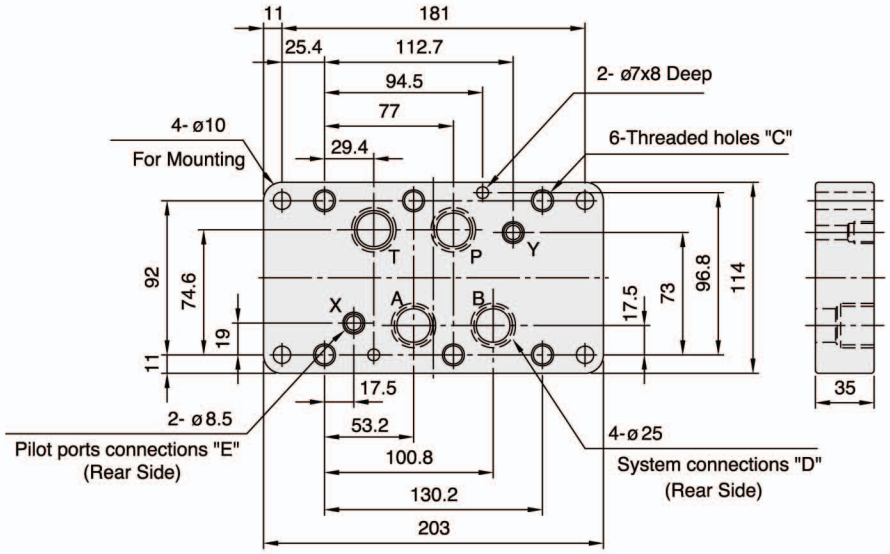

Model	C	D	E	Weight
DGSP-08H-12	M12x25 Deep(min) full thread depth	3/4"Rc	1/4"Rc	4.8Kg
DGSP-08H-16		1"Rc	1/4"Rc	4.8Kg
DGSP-08HG-12		3/4"BSP	1/4"BSP	4.8Kg
DGSP-08HG-16		1"BSP	1/4"BSP	4.8Kg

Model	C	D	E	Weight
DGSP-08HN-12	1/2"-13UNC-2B Thd.x1" Deep full thread depth	3/4"NPT	1/4"NPT	4.8Kg
DGSP-08HN-16		1"NPT	1/4"NPT	4.8Kg
DGSP-08HS-12		3/4"SAE	1/4"SAE	4.8Kg
DGSP-08HS-16		1"SAE	1/4"SAE	4.8Kg

Side connection

DGSP-08H ∗ - ∗E

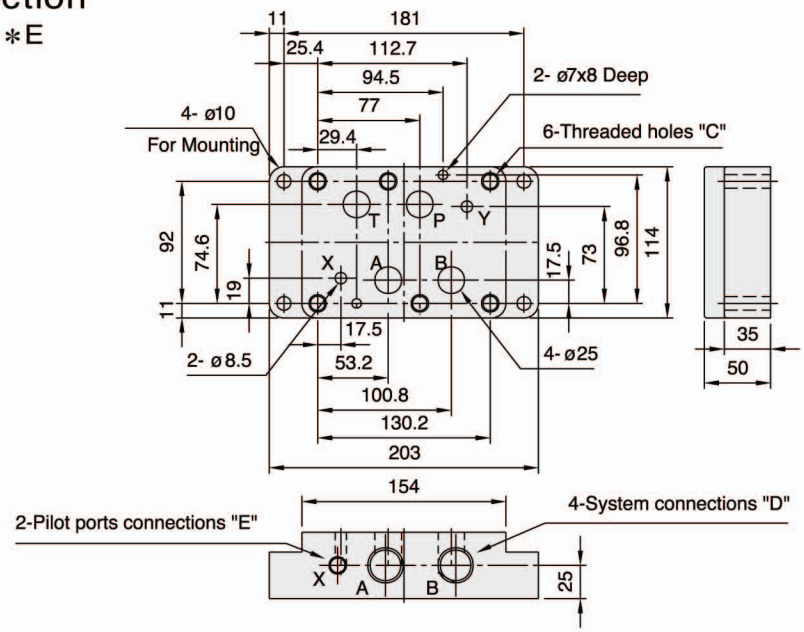

Model	C	D	E	Weight
DGSP-08H-12E	M12x25 Deep(min) full thread depth	3/4"Rc	1/4"Rc	6.4Kg
DGSP-08H-16E		1"Rc	1/4"Rc	6.4Kg
DGSP-08HG-12E		3/4"BSP	1/4"BSP	6.4Kg
DGSP-08HG-16E		1"BSP	1/4"BSP	6.4Kg

Model	C	D	E	Weight
DGSP-08HN-12E	1/2"-13UNC-2B Thd.x1" Deep full thread depth	3/4"NPT	1/4"NPT	6.4Kg
DGSP-08HN-16E		1"NPT	1/4"NPT	6.4Kg
DGSP-08HS-12E		3/4"SAE	1/4"SAE	6.4Kg
DGSP-08HS-16E		1"SAE	1/4"SAE	6.4Kg

EDG10 Size 32

Characteristics :

- Highest performance in NG 32.
- Optimized spool design to reduce flow force.
- Proven quality through 10 million endurance test.
- Manual overrides standard.
- "P" port pilot pressure insert for open center spools.
- Connections to DIN, ISO and CETOP.

Graphic symbol :

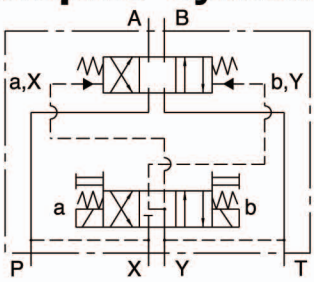

DG10-E- ∗C-T- ∗- ∗- ∗

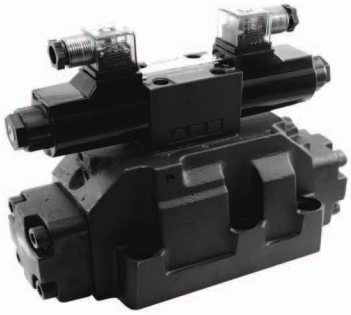

Model: DG10-E-2C-T-D2-DN-70

Model: DG10-E-2A-T-D2-DN-70

Specification :

Maximum flow		800 l/min {211 GPM}
Maximum operating pressure		250 bar {3571 PSI}
Maximum permissible back pressure		210 bar {3000 PSI}
Pilot pressure		12~210 bar
Ambient temperature range		-15˚C~50˚C
Hydraulic fluid temperature		-15˚C~70˚C
Viscosity range		15~400mm²/s
Hydraulic oil		ISO VG 32,46,68
Fluid cleanliness		NAS Class 9 MAX.
Maximum change over frequency		120 times/min
Mounting pattern		ISO 4401-AF-10-4-A
Weight (Valve with hydraulic operation)		43kg
Valve fixing screws	Matrix	M20x65L x6pcs.
	Inch	3/4"~10UNC x2-1/2"L x6pcs
Tightening torque		230~290 Nm

Cross section diagram :

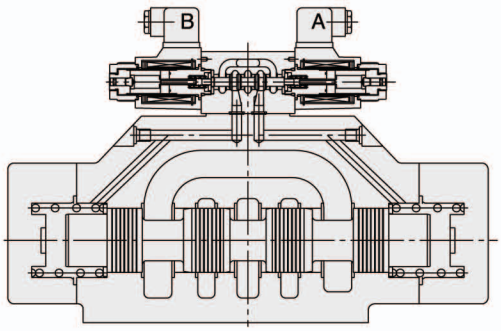

DG10-E-2C-T-A ∗-DN-70

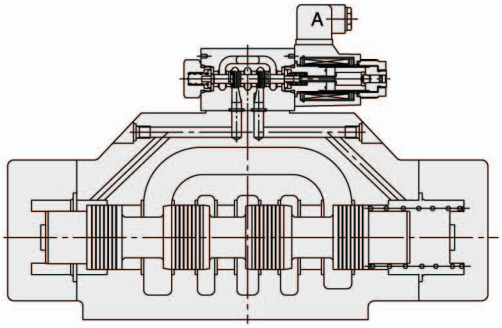

DG10-E-2A-T-A ∗-DN-70

Ordering code : EDG10 Size 32

D	G	10	-	E	-	2	C	-	E	T	-	A1	-	DN	-	70	-	* *
1	2	3		4		5	6		7	8		9		10		11		12

1 Directional Control Valve

2 Manifold or Subplate Mounting

3 Nominal valve size

- Nominal valve size: NG 32,CETOP 10 and ISO 4401-10.

4 Operator

- No code: Hydraulic (pilot) operation.
- E: Electro-hydraulic operation.

5 Type of Spool(Center Condition)

- 0: Open center(all ports).
- 1: Open center(P,A to T).
- 2: Closed center(all ports).
- 3: Closed center(P,B).
- 6: Closed center(P only).
- 7: Open center(P to A,B).
- 8: Tandem center(P to T).
- 11: Open center(P,B to T).
- 22: Closed center(two way).
- 31: Closed center(P,A).
- 33: Closed center(bleed A,B).

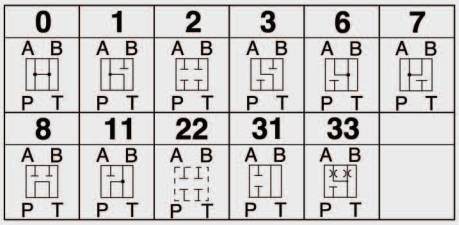

6 Spring Arrangement

- A: Spring offset.
- B: Spring centered with solenoid "A" removed.
- C: Spring centered.
- F: Spring offset-shift to center.
- N: Without spring with detent. (pilot only).

7 External Pilot Pressure

- No code: Internal pilot.
- E: External pilot.

8 Internal Pilot Drain

- No code: External drain.
- T: Internal drain.

9 Coil Identification

- A1: AC110V,50Hz/AC120V,60Hz;
- A2: AC220V,50Hz/AC240V,60Hz;
- D1: DC12V;
- D2: DC24V;;
- R1: AC110V,50/60Hz; Rectifier built-in type
- R2: AC220V,50/60Hz; Rectifier built-in type

10 Electrical Options

- DN: DIN 43650 Coils.
- WB: Wiring housing with G1/2 thread and indicator lights.

11 Design Number

- 70: Without indicator lights.
- 71: With indicator lights.
- 72: Without angled plug but with cap.

12 Optional Inquiry

- S: Stroke adjustment.

Spool types : EDG10 Size 32

Position type at neutral	Double solenoid valves, spring centered -C-	Single solenoid valves, solenoid at port A end -B-	Single solenoid valves, solenoid at port B end -BL-
0	DG10-0C	DG10-0B	DG10-0BL
1	DG10-1C	DG10-1B	DG10-1BL
2	DG10-2C	DG10-2B	DG10-2BL
3	DG10-3C	DG10-3B	DG10-3BL
6	DG10-6C	DG10-6B	DG10-6BL
7	DG10-7C	DG10-7B	DG10-7BL
8	DG10-8C	DG10-8B	DG10-8BL
11	DG10-11C	DG10-11B	DG10-11BL
31	DG10-31C	DG10-31B	DG10-31BL
33	DG10-33C	DG10-33B	DG10-33BL

Spool types :

EDG10 **Size 32**

Position type at neutral	Single solenoid valves, solenoid at port A end -A-	Single solenoid valves, solenoid at port A end -AL-
0	DG10-0A 	DG10-0AL 
2	DG10-2A 	DG10-2AL 
6	DG10-6A 	DG10-6AL 
7	DG10-7A 	DG10-7AL 
22	DG10-22A 	DG10-22AL 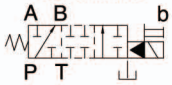

Installation Dimensions :

Mounting Surface: ISO 4401-AF-10-4-A

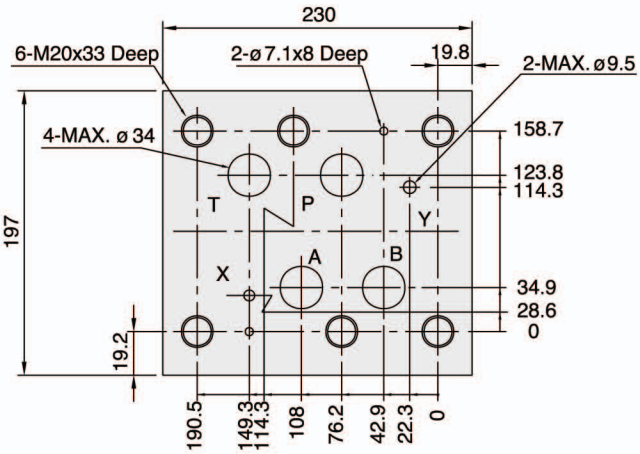

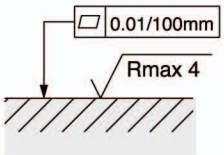

Required surface finish of mating piece when fitting the valve without subplate.

Stroke adjustment :

DG10-E- ∗- ∗- ∗-70-S

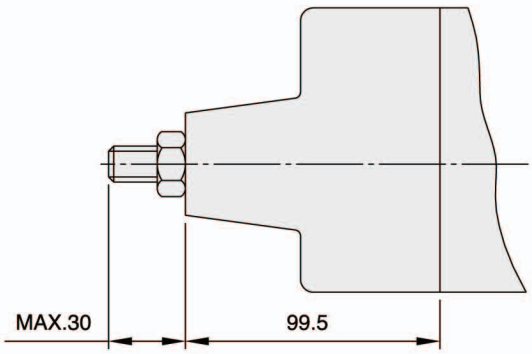

DG-10

Performance curves : EDG10 Size 32

(Viscosity of Hydraulic Fluid: 20 mm²/s)

Spool Type	PRESSURE DROP CHARACTERISTICS				
	P→A	P→B	A→T	B→T	P→T
0C	1	1	3	5	3
2C	2	2	4	6	-
3C	2	3	3	8	-
6C	2	2	3	4	-
8C	4	5	10	9	6
33C	2	2	6	6	-
0A	1	1	3	5	-
2A	2	2	4	6	-
6A	2	2	3	4	-

DG10- ∗-A ∗- ∗-70

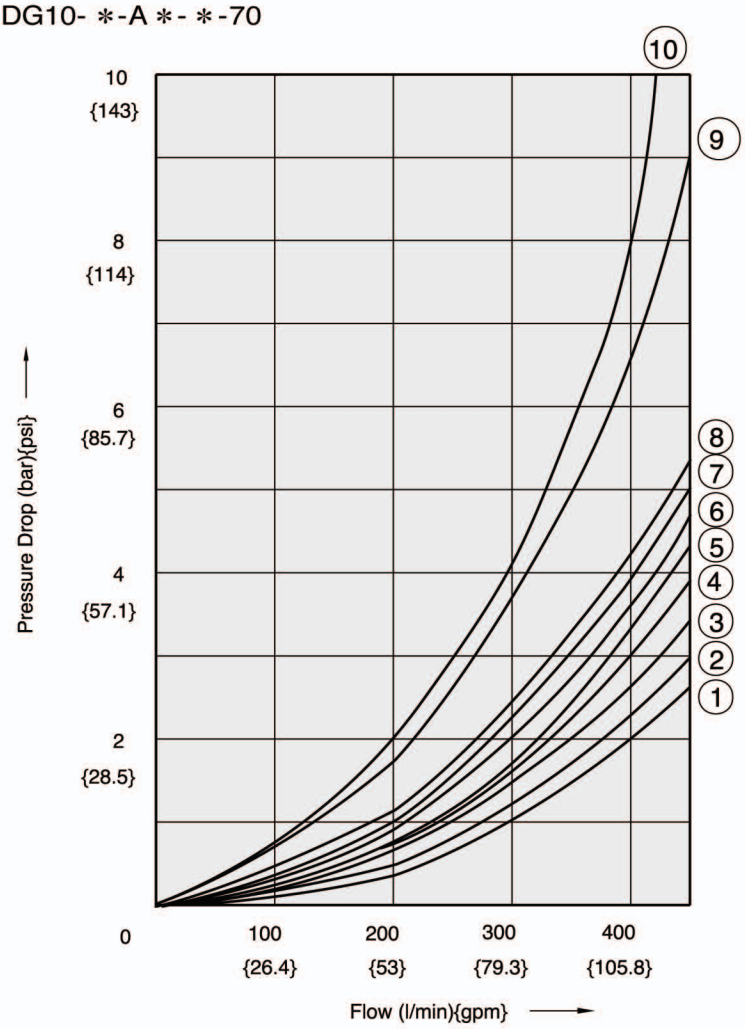

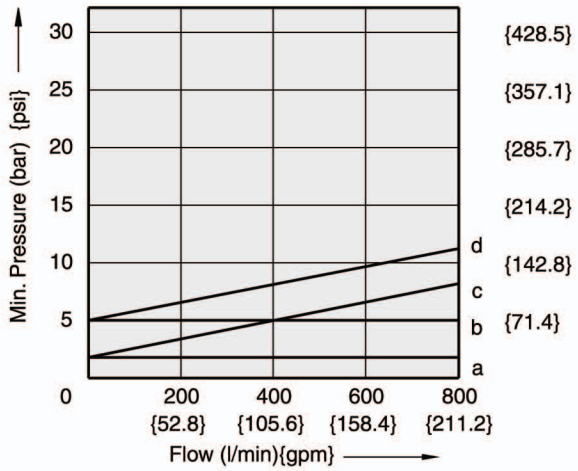

DG-10

Performance curves : EDG03 Size 6

Perssure Drop Curve Reference Chart

Viscosity of Hydraulic Fluid: 20 mm²/s

Spool Type	C, B, BL								
	Control Position				Neutral Position				
	P→A	B→T	P→B	A→T	P→T	A→T	B→T	P→A	P→B
0	4	3	4	3	4	1	1	4	4
1	4	3	4	3	8	2	-	4	-
2	6	4	6	4	-	-	-	-	-
3	6	4	8	2	-	4	-	-	-
6	8	2	8	2	-	4	4	-	-
7	4	6	4	6	-	-	-	7	7
8	7	5	7	5	8	-	-	-	-
11	4	3	4	3	8	-	2	-	4
31	8	2	6	4	-	-	4	-	-
33	6	4	6	4	-	10	10	-	-

Spool Type	A, AL			
	Control Position			
	P→A	B→T	P→B	A→T
0	5	4	5	4
2	7	6	7	8
6	7	4	8	4
7	5	8	5	9
22	6	-	7	-

Spool Type	N			
	Control Position			
	P→A	B→T	P→B	A→T
2	7	4	7	4

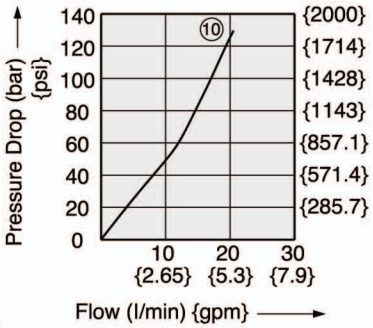

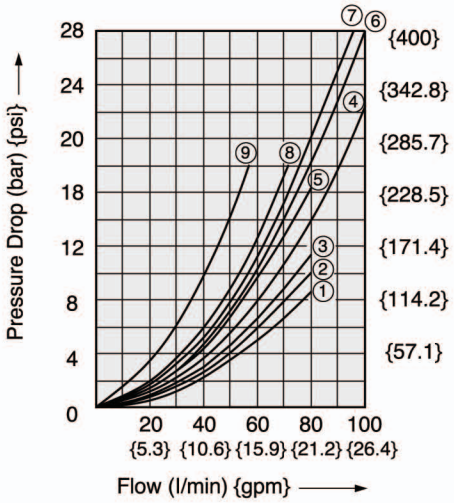

Wiring :

DG03 - ∗C - ∗ - WB - 71

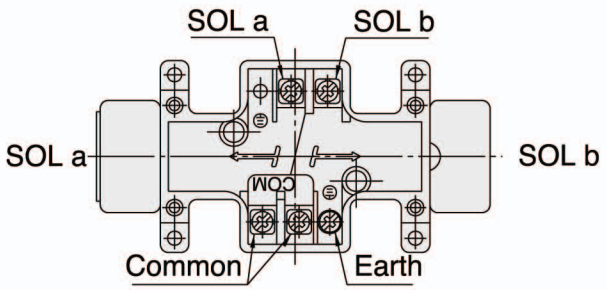

Note)

1: COM terminal is fitted in double solenoid valve for easiness of wiring.

2: Use an earth terminal when ground wiring is necessary.

3: Use a compressed terminal for M3.

4: Fasten the screw of the terminal with 0.5~0.7 N.m {4.3~6.1 lbs.inch} torque.

Dimensions :

EDG10 **Size 32**

DG10-E-2A-T- ∗-∗-∗
(∗A)

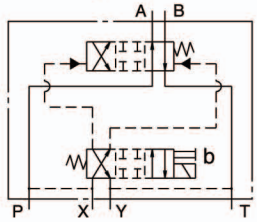

DG10-E-2AL-T- ∗-∗-∗
(∗AL)

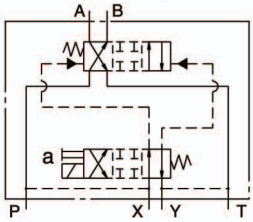

DG10-E- ∗C-T- ∗-∗-∗

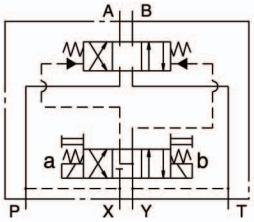

DG10-E-2B-T- ∗-∗-∗
(∗B)

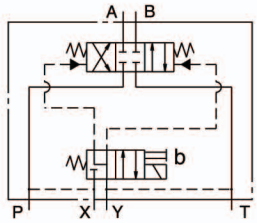

DG10-E-2BL-T- ∗-∗-∗
(∗BL)

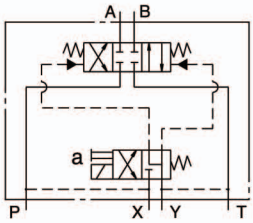

DG10-E-2N-T- ∗-∗-∗
(∗N)

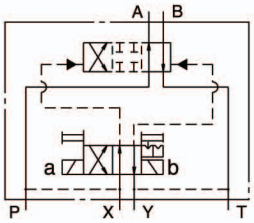

DG10-E- ∗A-A∗-DN-70
∗B

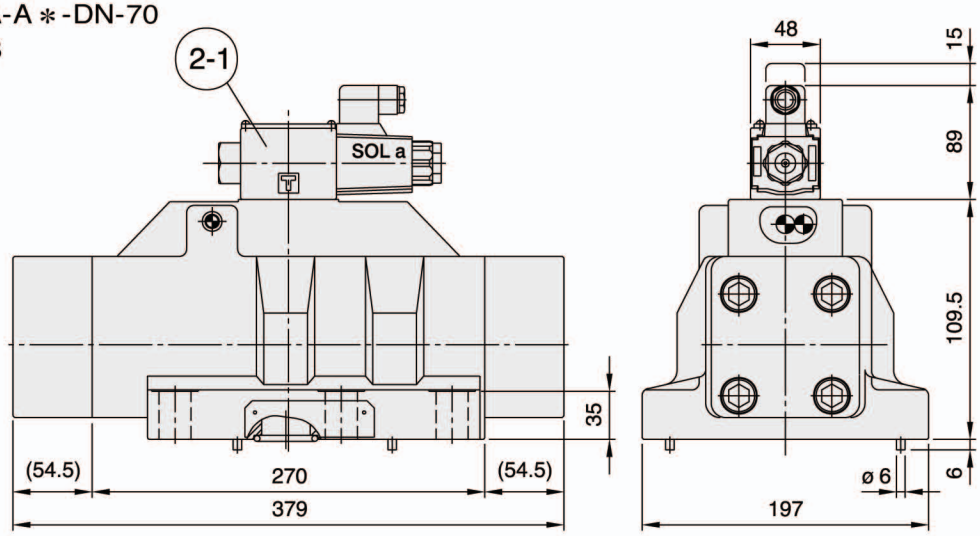

DG10-E- ∗AL-A∗-DN-70
∗BL

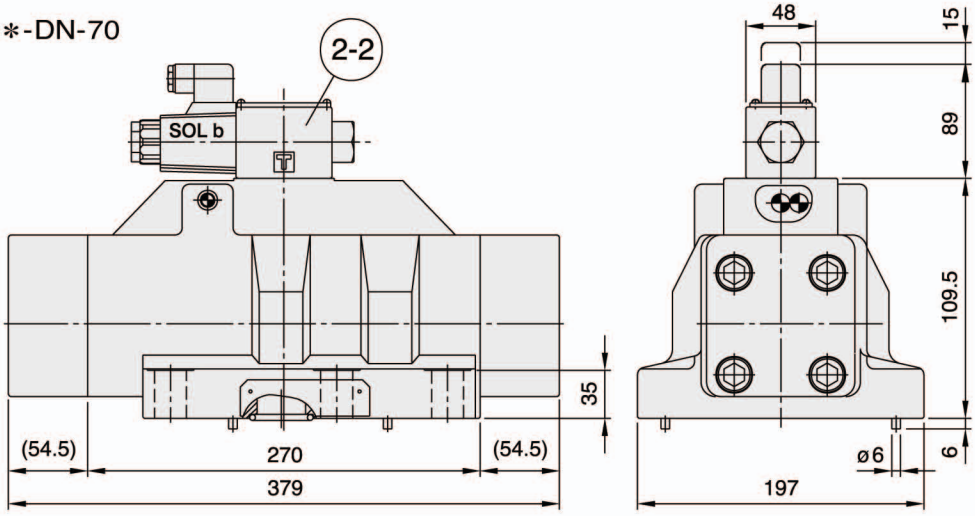

DG-10

Dimensions : EDG10 Size 32

DG10-E- ∗C-A ∗-DN-70

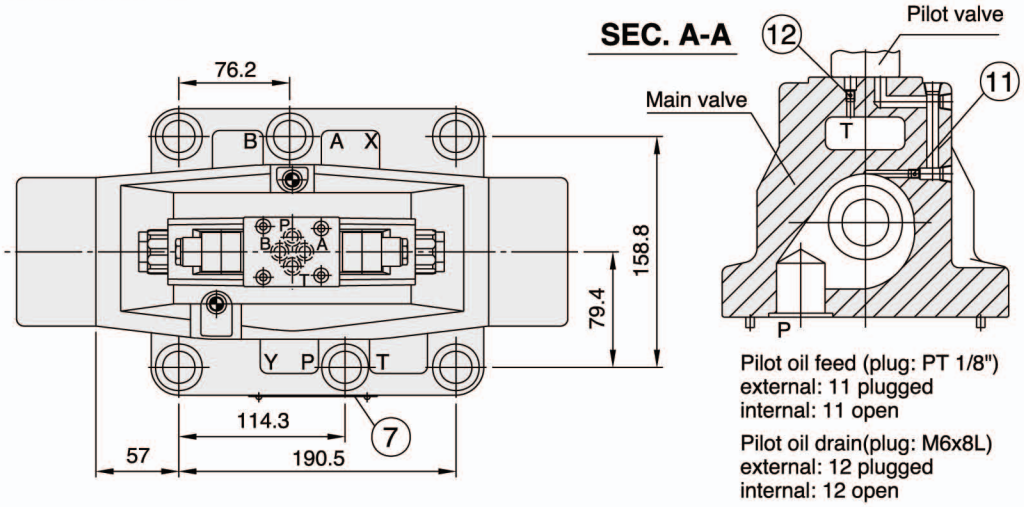

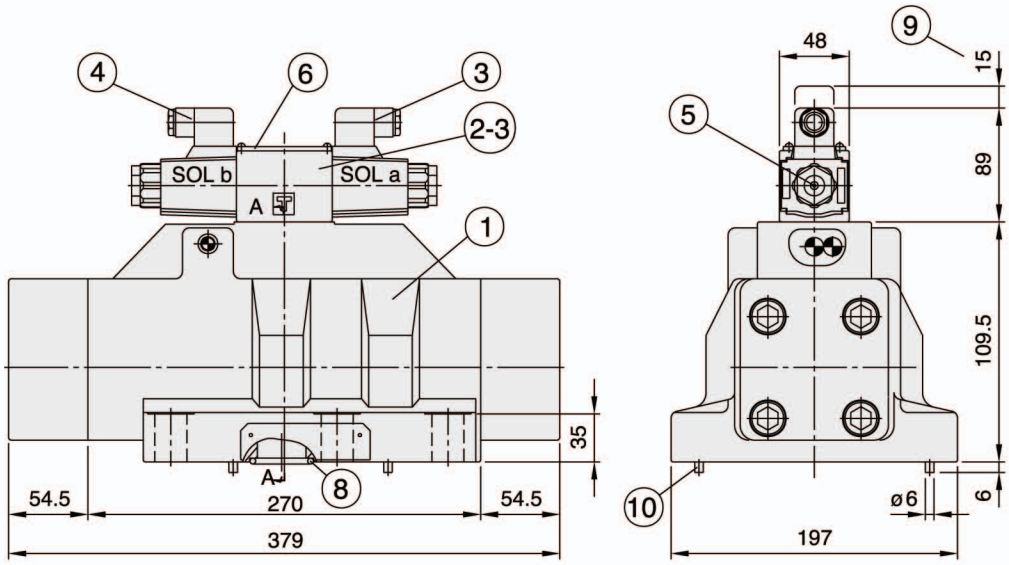

1: Main valve

2: Pilot valve

2-1. Pilot valve DG03-2AL- ∗(1 solenoid) for main valves with spools ∗A, (3 position valve with solenoid on side a)

Pilot valve DG03-6BL- ∗(1 solenoid) for main valves with spools ∗B, (3 position valve with solenoid on side a)

2-2. Pilot valve DG03-2A- ∗(1 solenoid) for main valves with spools ∗AL,(3 position valve with solenoid on side b)

Pilot valve DG03-6B- ∗(1 solenoid) for main valves with spools ∗BL,(3 position valve with solenoid on side b)

2-3. Pilot valve DG03-6C- ∗(2 solenoid) for main valves with 3 positions

3: Solenoid a, colour of plug: grey

4: Solenoid b, colour of plug: black

5: Push pin for manual operation

6: Nameplate for pilot valve

7: Nameplate for whole valve

8: O-ring: Ports A,B,P,T: 1B-P38 (NBR, Hs90); 1B-P24 (NBR, Hs90)

9: Space required to remove plug

10: Locating pin

EQUUS

Features:

E MCD10

- MCD10 Series are Sectional directional control valves with parallel circuits. The standard valve comes with an adjustable main relief valve and a check valve. The carry over circuit, spool types, spool controls, and other options are available.
- The compact casting is made of high strenght cast iron. The spools are made of hardened and tempered steel.

Specification

Nominal Flow	80 L/min (21 USgpm)
Max. Pressure	210 bar (3000 psi)
Port A-B	BSPT 1/2” or SAE8
Port P	BSPT 1/2” or SAE10
Port T	BSPT 3/4” or SAE10

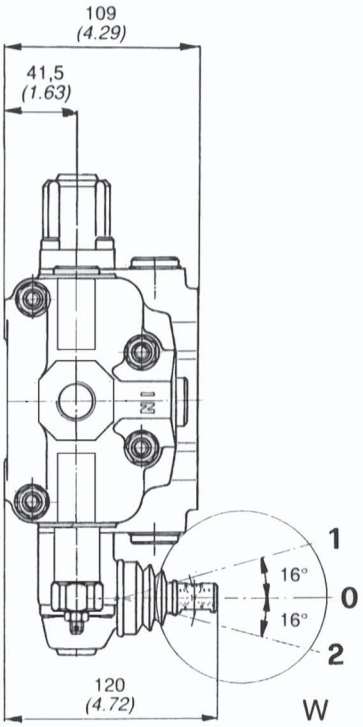

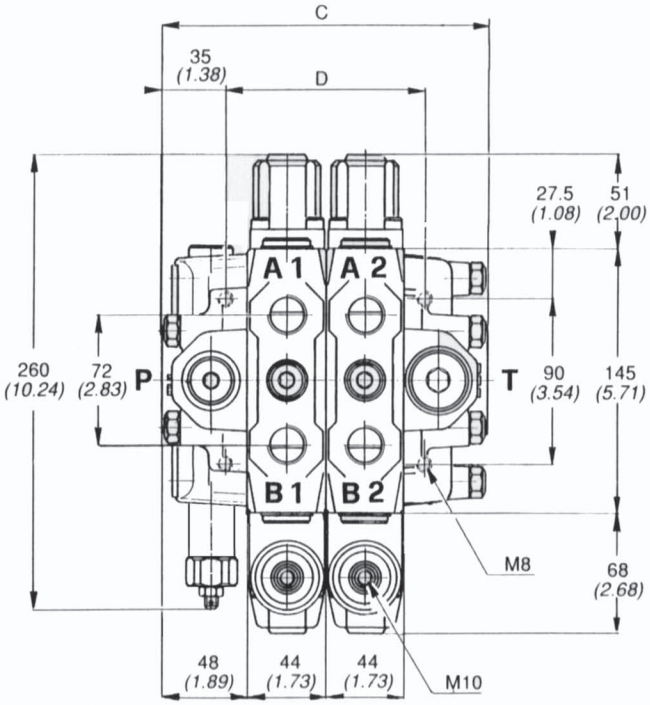

	C		D		Weight	
	mm	inch	mm	inch	kg	lb
MCD 10/1	144	5.67	70	2.76	10.2	22.4
MCD 10/2	188	7.40	114	4.49	14.9	32.8
MCD 10/3	232	9.13	158	6.22	19.6	43.1
MCD 10/4	276	10.87	202	7.95	24.3	53.5
MCD 10/5	320	12.60	246	9.69	29.0	63.8
MCD 10/6	364	14.33	290	11.42	33.7	74.1
MCD 10/7	408	16.06	334	13.15	38.4	84.5
MCD 10/8	452	17.80	378	14.88	43.1	94.8
MCD 10/9	496	19.53	422	16.61	47.8	105.2
MCD 10/10	540	21.26	466	18.35	52.5	115.5

Features and Specifications:

E MCD20/MCD50

- MCD20 and MCD50 Series are monoblock directional control valves with parallel circuits. The standard valve comes with an adjustable main relief valve, check valve, and 4 mounting holes for standard and optional mounting. The carry over circuit, spool types, spool controls, and other options are available.
- The compact casting is made of high strenght cast iron. The spools are made of hardened and tempered steel.

Specification

	Nominal Flow *L/min (USgpm)*	Max. Pressure *bar (psi)*
MCD20	45 (12)	210 (3000)
MCD50	70 (18)	210 (3000)

Standard - with open center

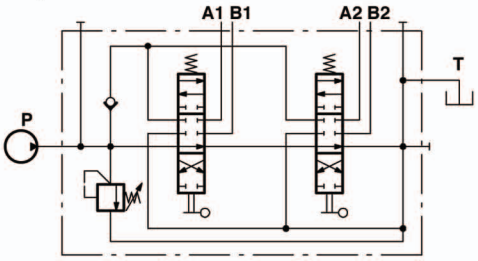

With carry over

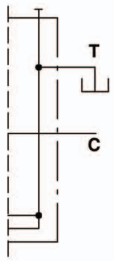

With closed center

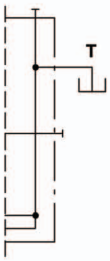

Ordering Code:

Inlet | 1st Spool | 2nd Spool | Outlet

EMCD20/2 - 140 / D1C / D1C / CO- BSP-TT

Model
MCD20, MCD50

Number of Spool

Relief Valve Setting (bar)
no code - 210 bar
140 - 140 bar

Spool Control
no code or **S** - Spring return to center
D - Detent in three positions

Spool Type
no code or **1** - Double acting, 3 positions with A and B closed in center
A - Single acting on A, 3 positions B plugged
B - Single acting on B, 3 positions A plugged
M - Double acting, 3 positions with A and B to tank in center

Service Valve* (MCD20 only)
no code - Without valve
P - Without valve, but with pre-arranged holes
C - With pilot operated check valves on port A and B

**With Service Valve, the main valve body will come without Port P and T on top and Port A and B can be BSPT 3/8" only, but Port A and B on check valve can be any threads as specified in Ordering Code.*

Optional Port Connection
no code - Port P and T at side with optional Port P and T pluged on top
TT - Port P and T on top with optional Port P and T pluged at side
SS - Port P and T at side only with standard 3 mounting holes only

Port Thread

		Thread	Port A-B	Port P-C	Port T
MCD20	no code	BSPT	3/8"	3/8"	3/8"
	T04	BSPT	1/2"	1/2"	1/2"
	BSP	BSP	1/2"	1/2"	1/2"
	SAE	SAE	SAE8	SAE10	SAE10
MCD50	no code	BSPT	1/2"	1/2"	3/4"
	T06	BSPT	3/4"	3/4"	3/4"
	BSP	BSP	3/4"	3/4"	3/4"
	SAE	SAE	SAE10	SAE12	SAE12

Circuit Option
no code - With open center plug
CO - With carry over sleeve
CC - With closed center plug

Examples:
MCD20/1-D = Single spool, double acting, detent in 3 positions, BSPT 3/8"
MCD20/2-A/B/CO-BSP = Double spool, 1st single acting on A, 2nd spool single acting on B, with carry over, BSP 1/2"

Installation Dimentions mm (inch): E MCD20-1/MCD20-2

E MCD20-1

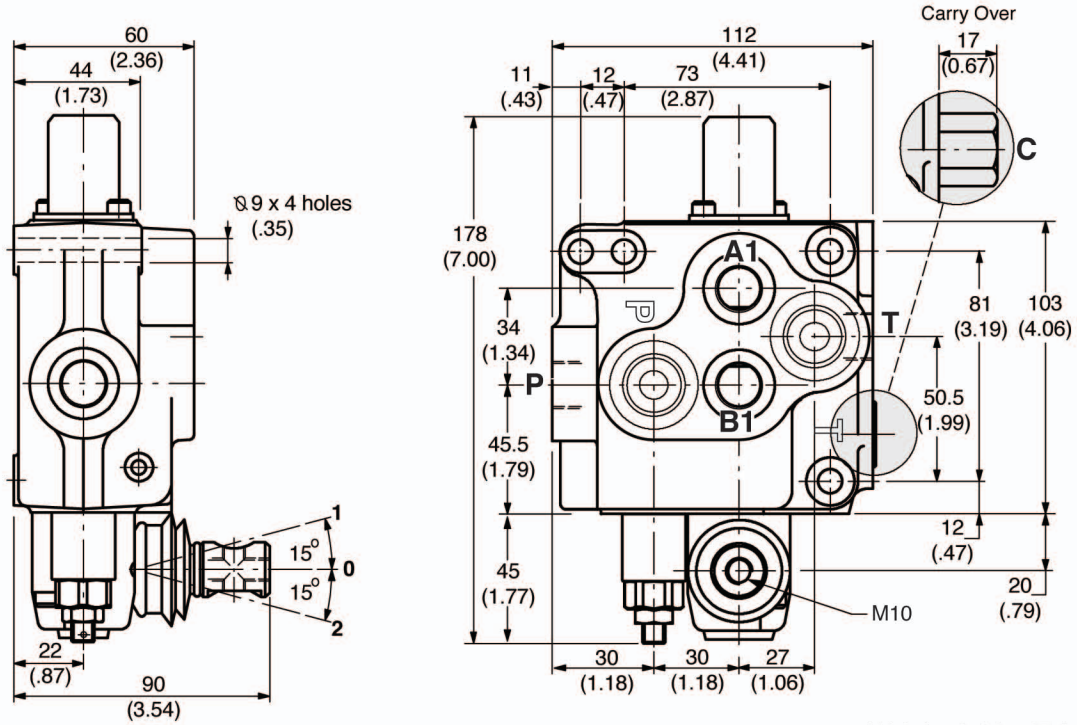

Weight: 3.6 kg (7.9 lb)

E MCD20-2

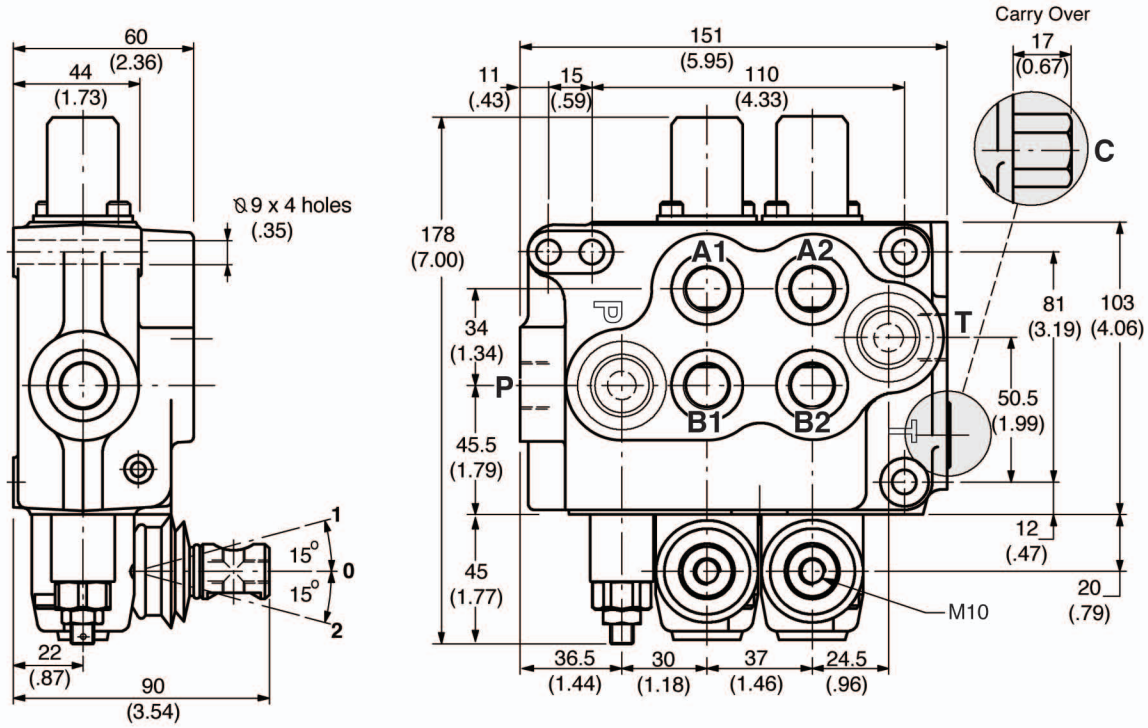

Weight: 5.1 kg (11.2 lb)

Installation Dimensions mm (inch): E MCD50-1/MCD50-2

E MCD50-1

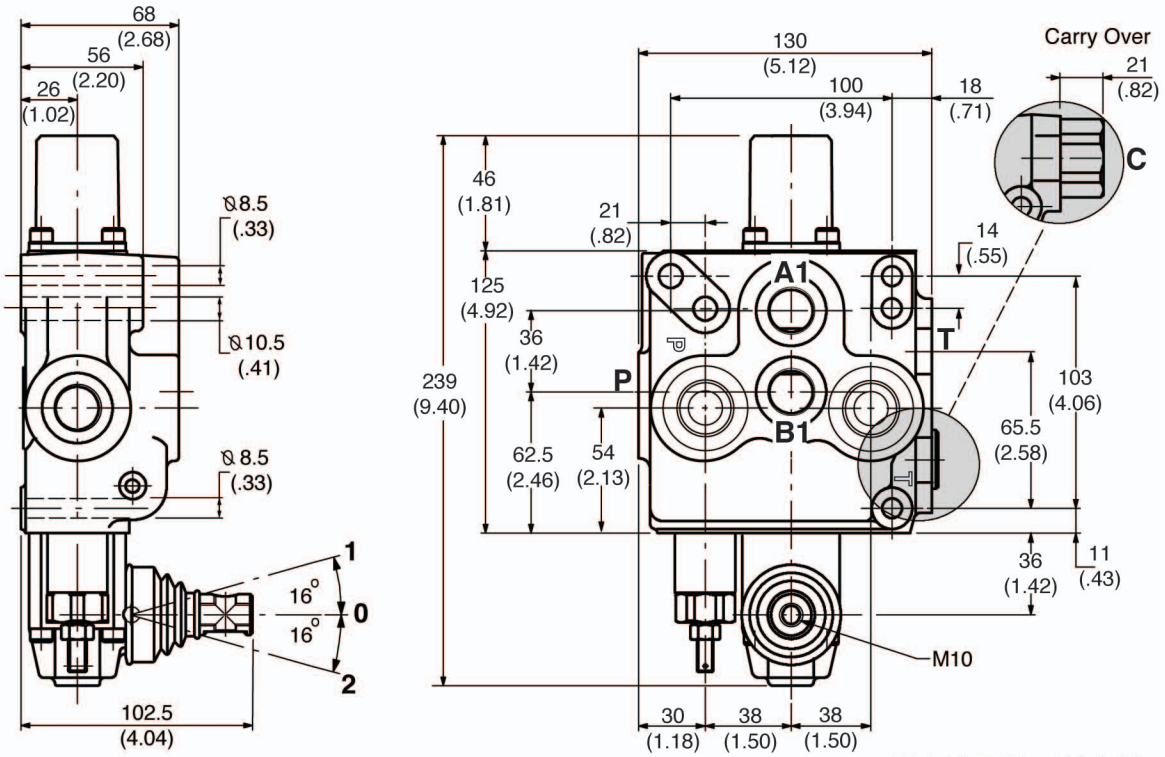

Weight: 5.5 kg (12.1 lb)

E MCD50-2

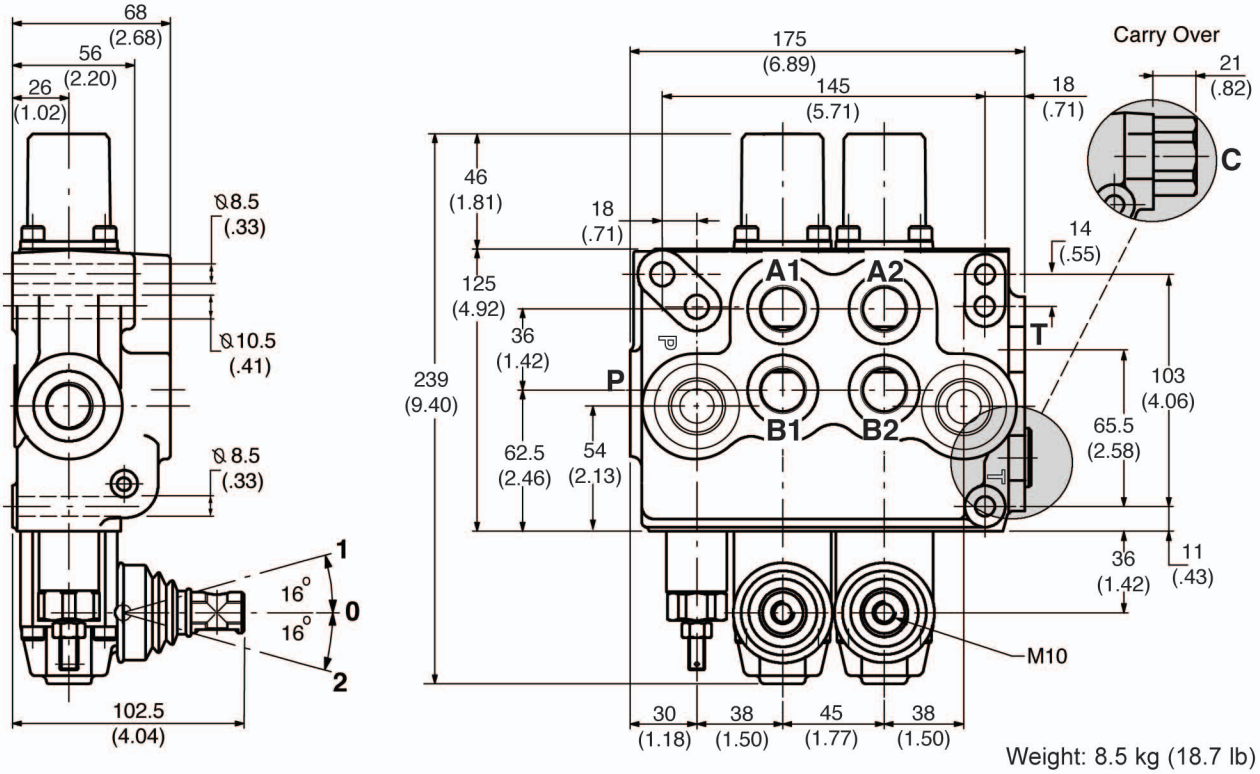

Weight: 8.5 kg (18.7 lb)

Dimensions : EDG03 Size 6

AC solenoid (DN Type)

DG03- ∗A-A ∗-DN-70
∗B
∗F

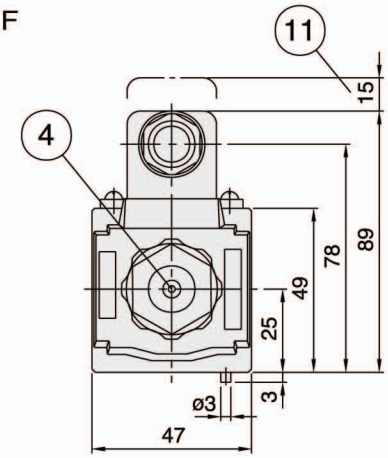

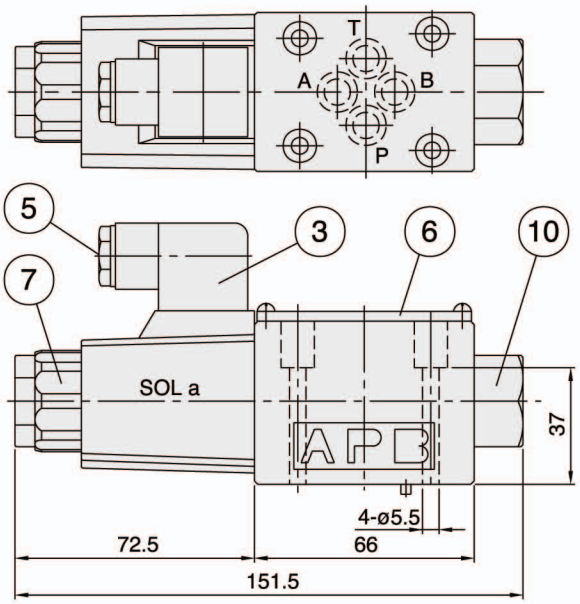

DG03- ∗AL-A ∗-DN-70
∗BL
∗FL

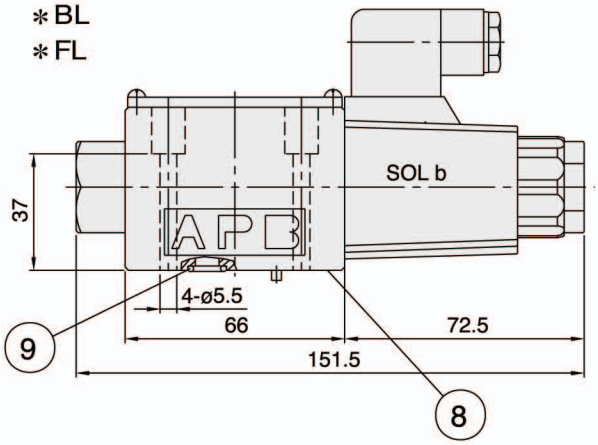

1: Solenoid a, colour of plug: grey
2: Solenoid b, colour of plug: black
3: Angled plug to DIN 43650
4: Push pin for manual operation
5: Lead wire take-out (Cable diameter ø6~9mm)
6: Nameplate
7: Lock nut with torque in the range 4~6 N.m
8: Connections to DIN 24340 from A6 valve fixing screws M5x45 DIN 912-1.9 tightening torque 5~7 Nm
9: O-ring 1B-P9
10: Plug for valves with 1 solenoid
11: Space required to remove plug
12: Coil removable length

DG03- ∗C-A ∗-DN-70
∗N

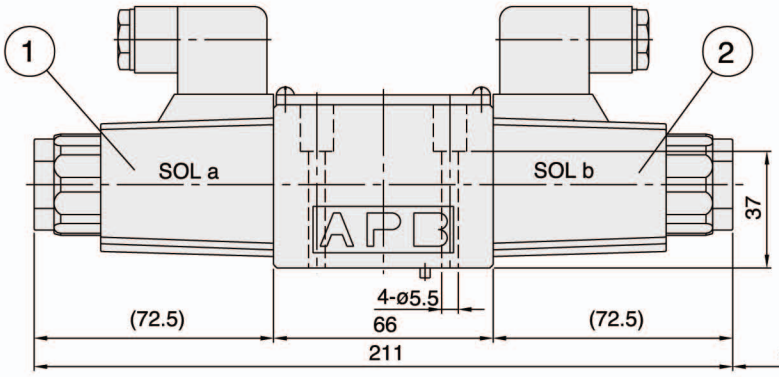

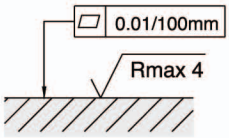

Required surface finish of mating piece when fitting the valve without subplate.

Dimensions : EDG03 Size 6

DC solenoid (DN Type)

DG03- ∗A-D ∗-DN-70
∗B
∗F

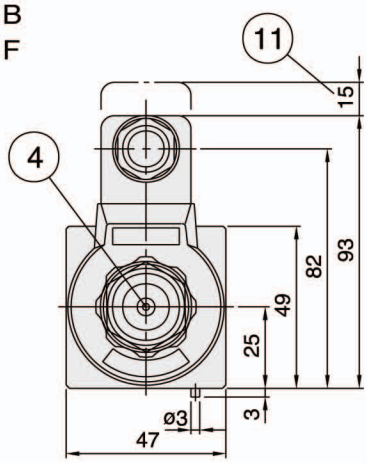

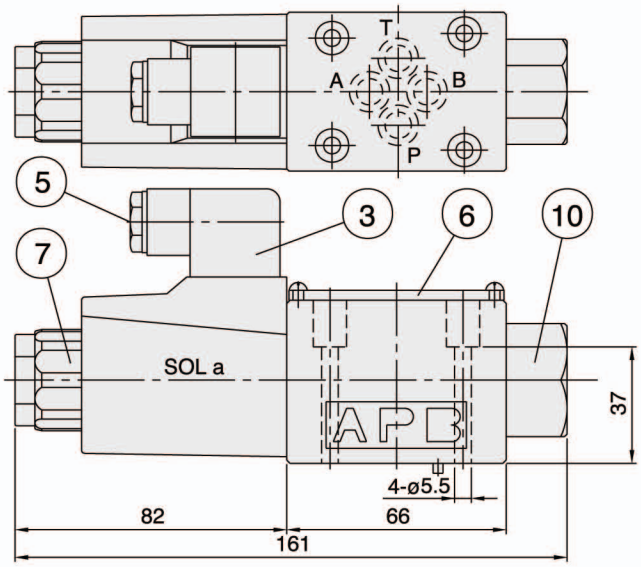

DG03- ∗AL-D ∗-DN-70
∗BL
∗FL

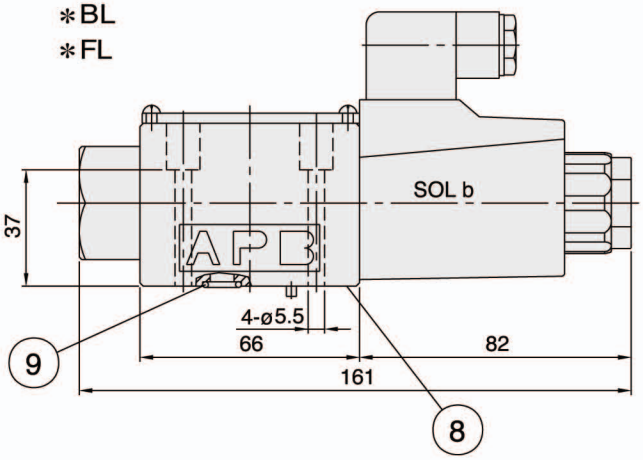

1: Solenoid a, colour of plug: grey
2: Solenoid b, colour of plug: black
3: Angled plug to DIN 43650
4: Push pin for manual operation
5: Lead wire take-out(Cable diameter 6~9 mm)
6: Nameplate
7: Lock nut with torque in the range 4~6 N.m
8: Connections to DIN 24340 from A6; valve fixing screws M5x45 DIN 912-10.9 tightening torque 5~7 Nm
9: O-ring 1B-P9
10: Plug for valves with 1 solenoid
11: Space required to remove plug
12: Coil removable length

DG03- ∗C-D ∗-DN-70
∗N

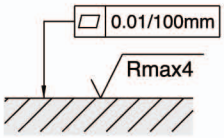

Required surface finish of mating piece when fitting the valve without subplate.

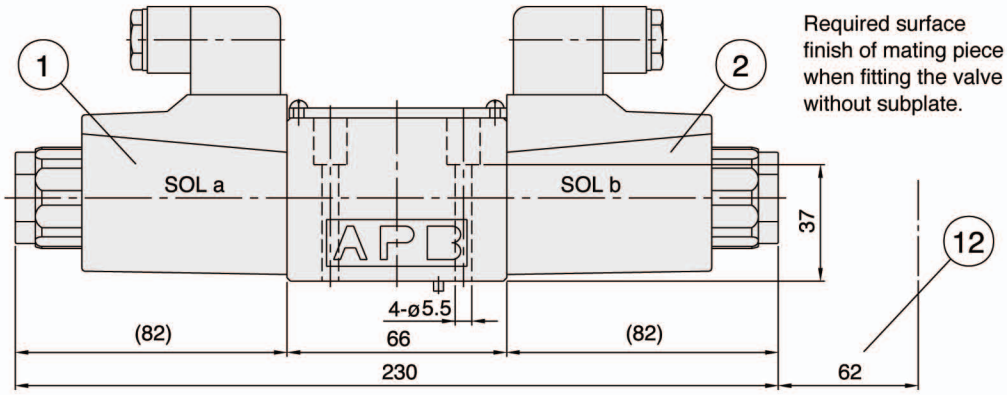

Dimensions : EDG03 Size 6

AC solenoid (WB Type)

DG03- ∗A-A ∗-WB-71
∗B
∗F

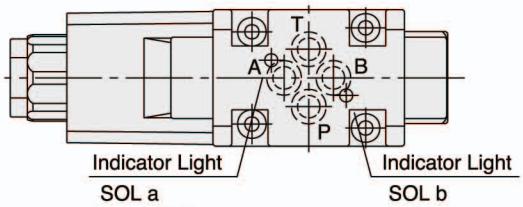

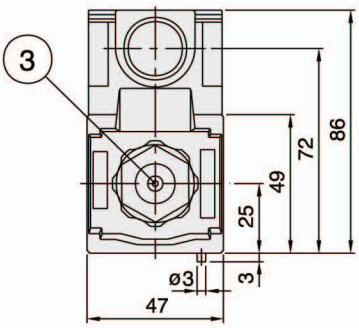

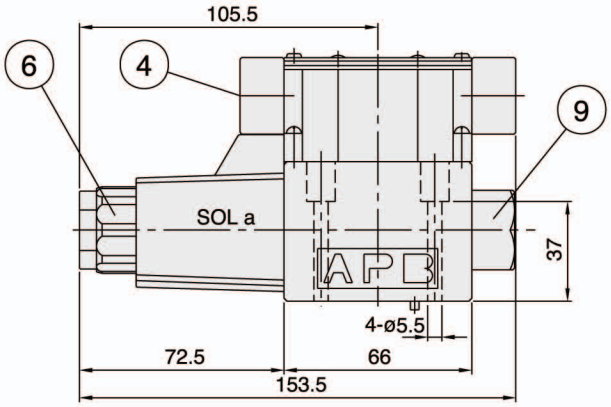

DG03- ∗AL-A ∗-WB-71
∗BL
∗FL

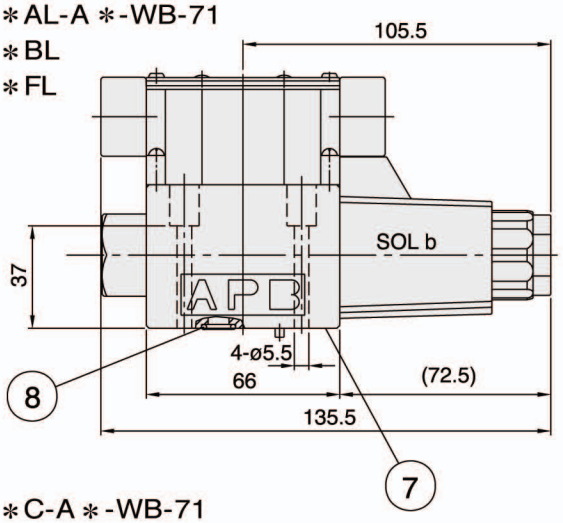

1: Solenoid a
2: Solenoid b
3: Push pin for manual operation
4: Lead wire take-out(G1/2")
5: Nameplate
6: Lock nut with torque in the range 4~6 N.m
7: Connections to DIN 24340 from A6; valve fixing screws M5x45 DIN 912-10.9 tightening torque 5~7 Nm
8: O-ring 1B-P9
9: Plug for valves with 1 solenoid
10: Coil removable length

DG03- ∗C-A ∗-WB-71
∗N

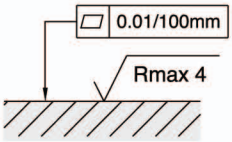

Required surface finish of mating piece when fitting the valve without subplate.

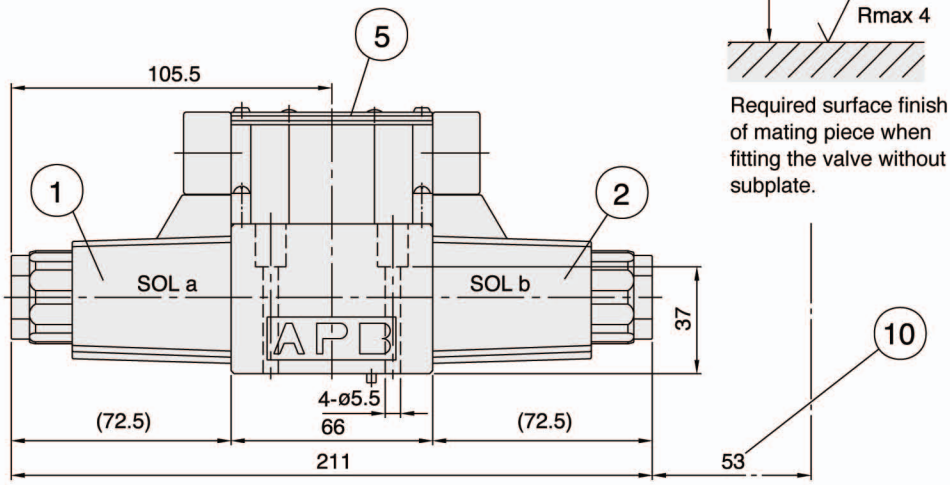

Dimensions : EDG03 Size 6

DC solenoid (WB Type)

DG03- ∗A-D ∗-WB-71
∗B
∗F

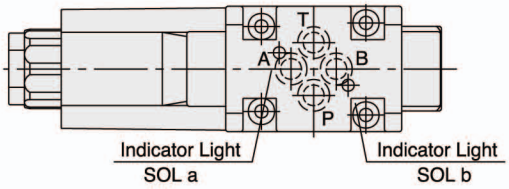

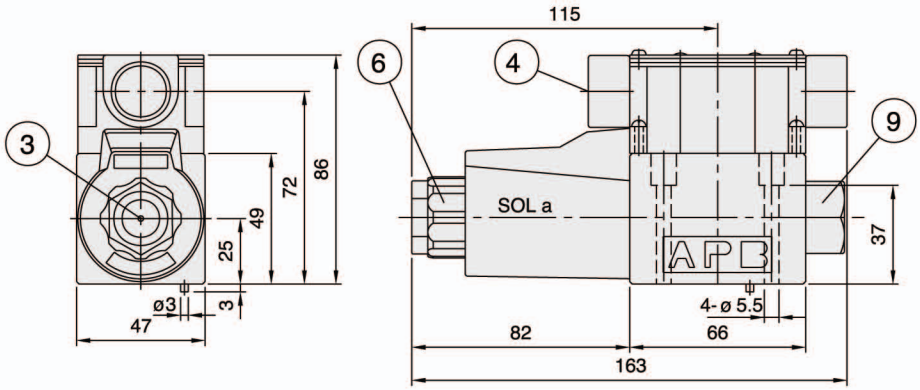

DG03- ∗AL-D ∗-WB-71
∗BL
∗FL

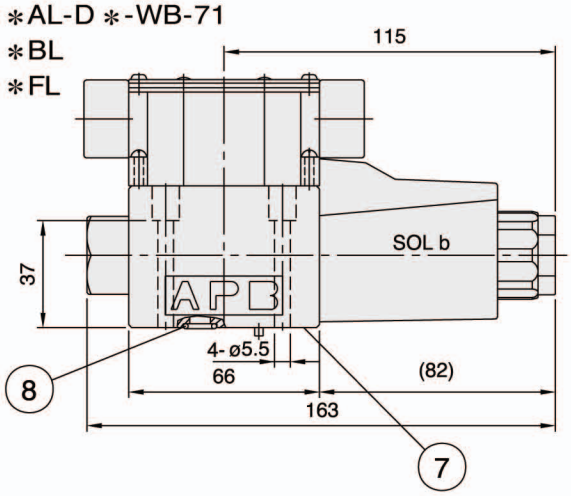

1: Solenoid a
2: Solenoid b
3: Push pin for manual operation
4: Lead wire take-out(G1/2")
5: Nameplate
6: Lock nut with torque in the range 4~6 Nm
7: Connections to DIN 24340 from A6; valve fixing screws M5x45 DIN 912-10.9 tightening torque 5~7 Nm
8: O-ring 1B-P9
9: Plug for valves with 1 solenoid
10: Coil removable length

DG03- ∗C-D ∗-WB-71
∗N

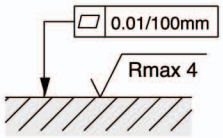

Required surface finish of mating piece when fitting the valve without subplate.