MODULAR VALVE SERIES

SANDWICH PLATE DESIGN

Characteristics :

03 **Size 6**

- Highest performance in NG 6.
- Compacting stacking valves.
- Eliminating intervalve piping and fittings.
- Reducing leakage and installation costs.
- Max. Operating Pressure: 32 MPa.
- Max. Flow: 50 ℓ /min.
- Connections to DIN, ISO and CETOP.

DGM-03
Modular Valve Series

Stacking Example :

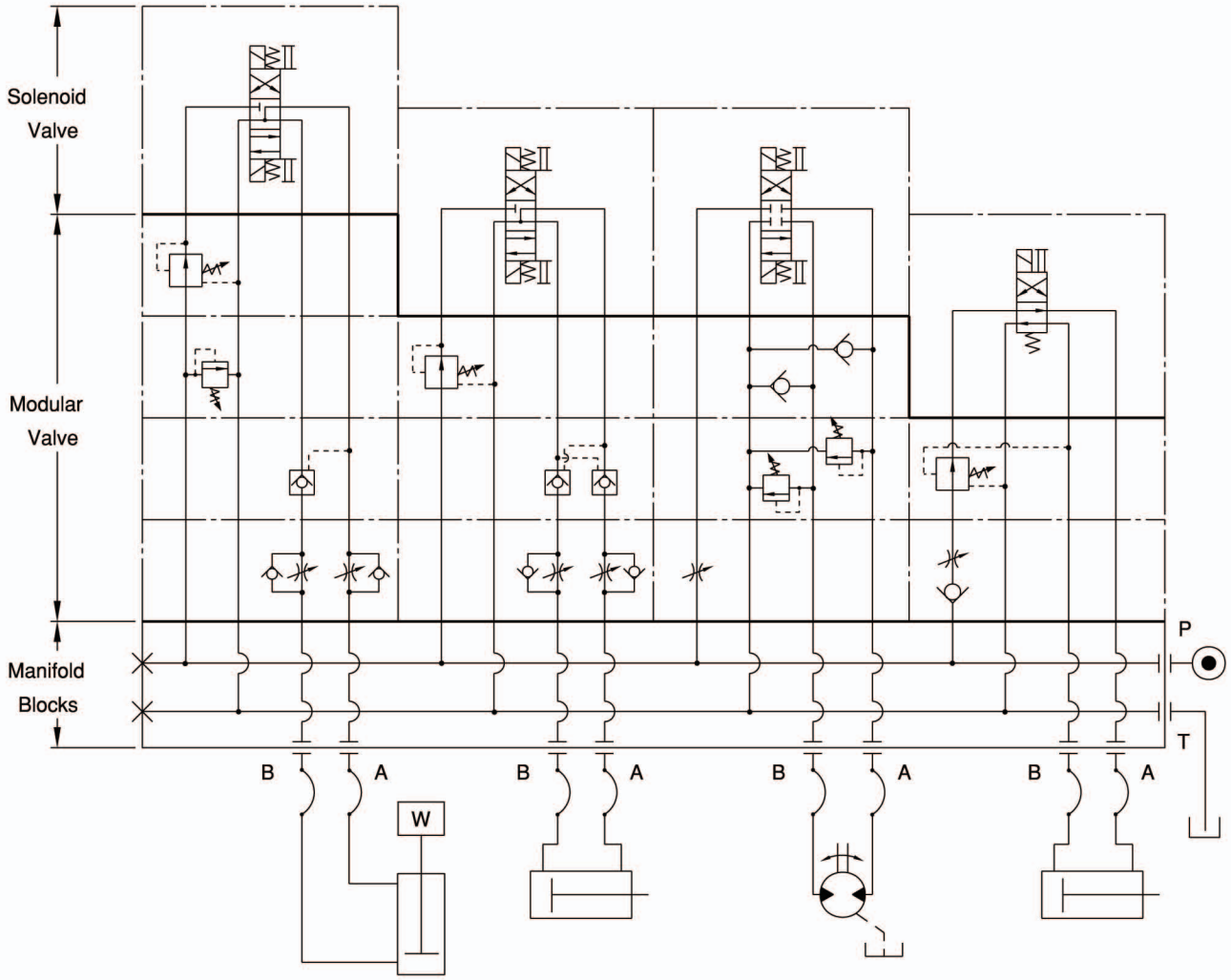

Dimensions : EDGMBV03 Size 6

DGMBV-03-W- ∗-10

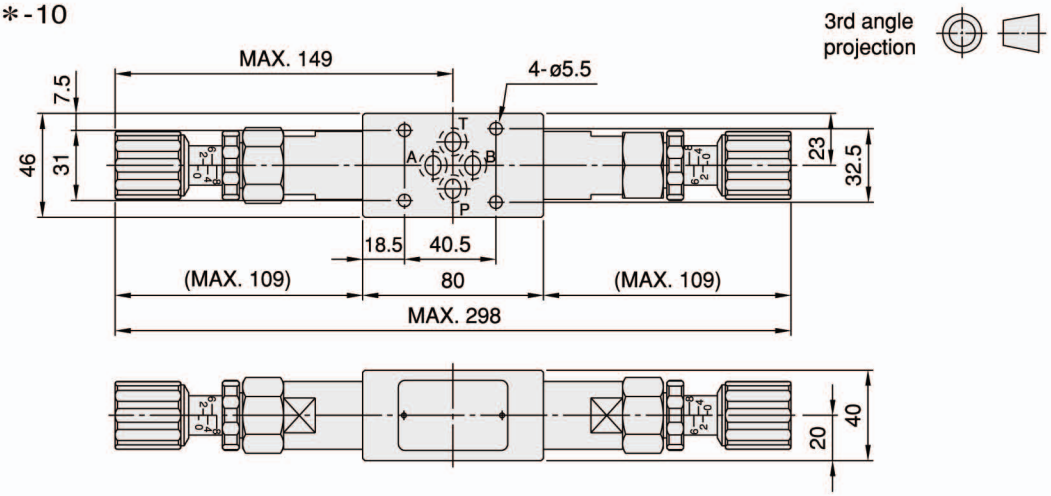

DGMBV-03-A- ∗-10

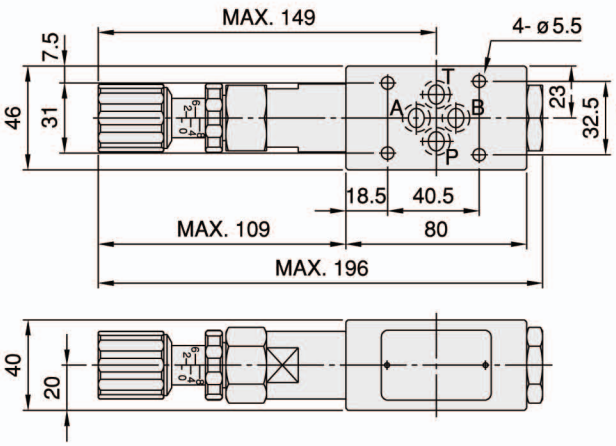

DGMBV-03-B- ∗-10

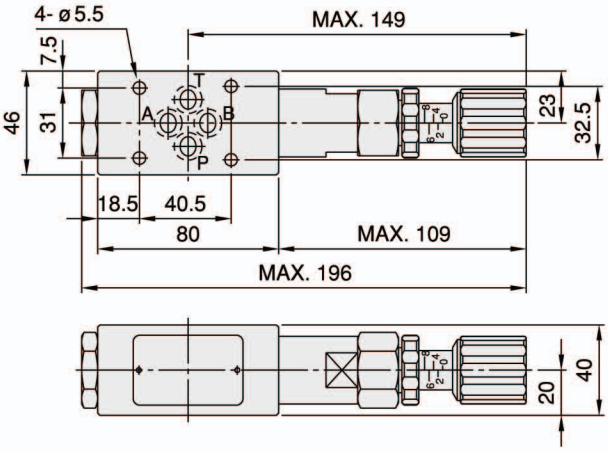

DGMBV-03- ∗- ∗-20

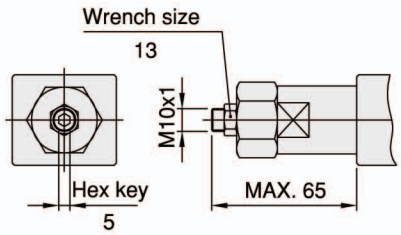

Cross Section Drawing :

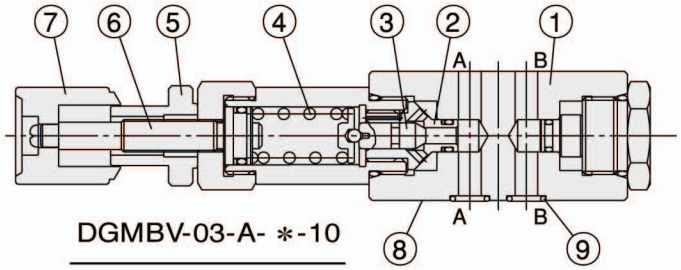

DGMBV-03-A- ∗-10

1. Body.
2. Seat.
3. Poppet.
4. Adjustment spring.
5. Locking nut.
6. Setting screw.
7. Adjustment element.
8. Connections to DIN 24340 from A6; valve fixing screws M5 DIN 912-10.9, tightening torque 8~9 Nm.
9. O-ring 1B-P9 for ports A, B, P and T.

Dimensions : EDGMCB07 Size 16

DGMCB-07-A1- ∗-20

3rd angle projection

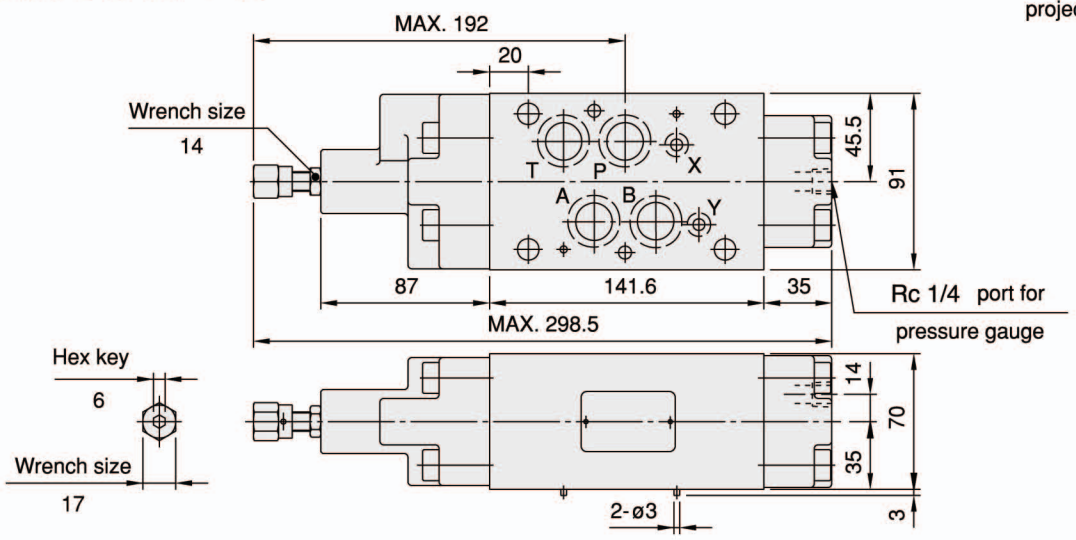

DGMCB-07-B1- ∗-20

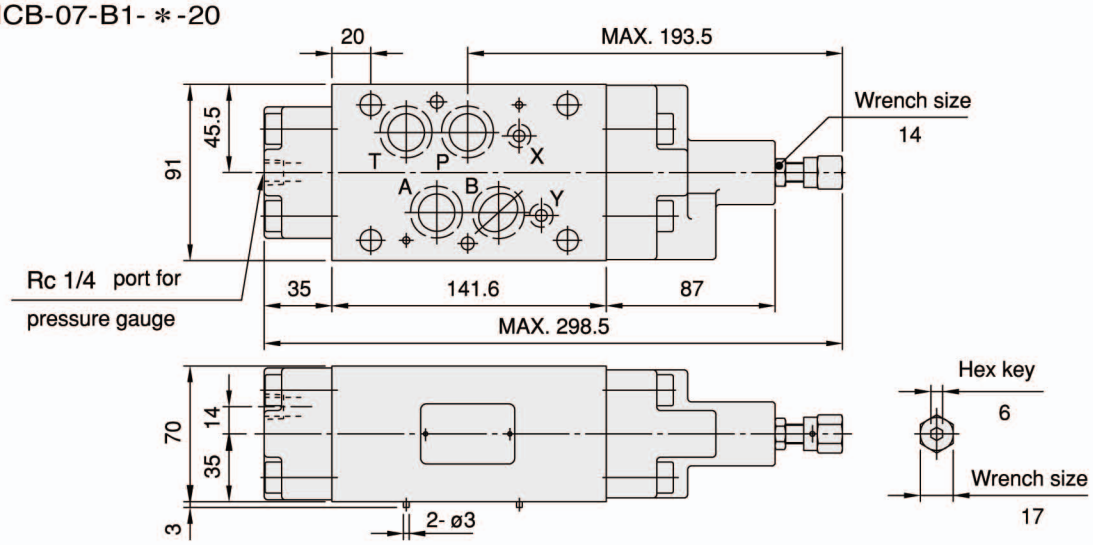

Cross Section Drawing :

DGMCB-07-B1- ∗-20

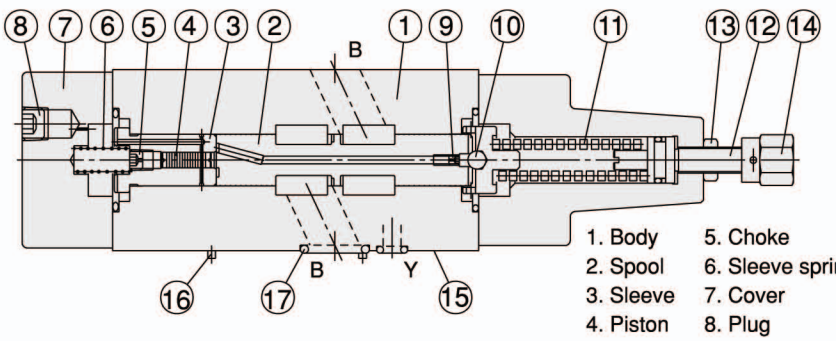

1. Body
2. Spool
3. Sleeve
4. Piston
5. Choke
6. Sleeve spring
7. Cover
8. Plug
9. Choke
10. Ball
11. Adjustment spring
12. Setting screw
13. Locking nut
14. Adjustment element
15. Connections to DIN 24340 from A16; 6 through holes for fixing screws
16. 2 locating pins
17. O-ring:
    Ports A,B,P,T: AS568-118(NBR,Hs90);
    Ports X,Y: AS568-013(NBR,Hs90)

Characteristics :

EDGMTC07 Size 16

- Highest performance in NG 16.
- Sandwich plate design.
- For limiting the main or pilot fluid flow of 2 actuator connections.
- For meter-in or meter-out control.
- Connections to DIN, ISO and CETOP.

Model: DGMTC-07-W-O-20

Specification :

Maximum flow	300 ℓ/min {79.3 GPM}
Maximum operating pressure	320 bar {4570 PSI}
Check valve cracking pressure	1.0 bar {14.3 PSI}
Ambient temperature range	-20˚C~+50˚C
Hydraulic fluid temperature	-20˚C~+70˚C
Viscosity range	15~400 mm²/s

Hydraulic oil		ISO VG 32, 46, 68
Fluid cleanliness		NAS Class 9 MAX.
Mounting pattern		ISO 4401-AD-07-4-A
Weight	W type	6.9 Kg
	A type	6.7 Kg
	B type	6.7 kg

Hydraulic Configuration :

DGMTC-07-W-O-20

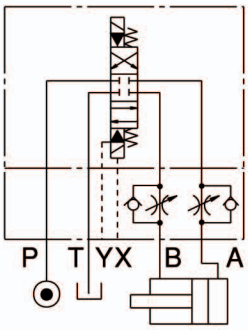

DGMTC-07-A-O-20

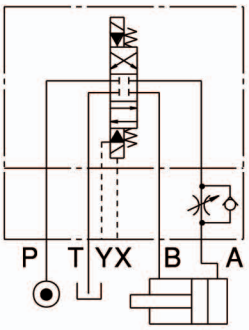

DGMTC-07-B-O-20

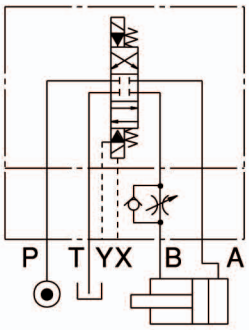

DGMTC-07-W-I-20

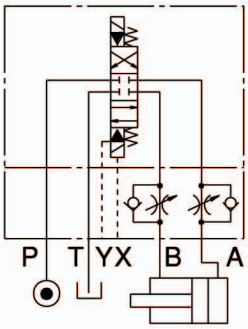

DGMTC-07-A-I-20

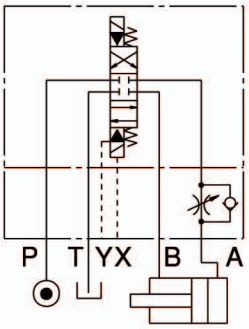

DGMTC-07-B-I-20

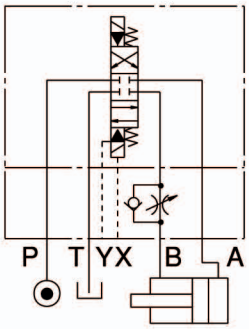

Ordering Code : EDGMTC07 Size 16

DGM	TC	-	07	-	W	-	O	-	20	-	**
1	2		3		4		5		6		7

1 Sandwich Plate Design

2 Flow Regulator with Check Valve

3 Nominal Valve Size

- Nominal valve size: NG 16, CETOP 7 and ISO 4401-07.

4 Configuration

- W: double: acting on ports A and B.
- A: single; acting on port A.
- B: single; acting on port B.

5 Control Way

- O: Metered out, control of flow discharged from the actuator.
- I : Metered in, control of flow entering the actuator.

6 Design Number

- 10: with handle
- 20: without handle

7 Optional Inquiry

DGM-07

Performance Curves :

Viscosity of Hydraulic Fluid: 32 mm²/s

Pressure Drop Characteristic

DGMTC-07-W-O-20
(DGMTC-07-W-I-20)

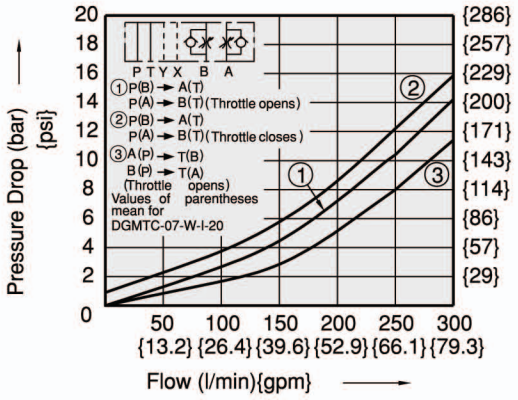

Stroke Versus Flow Diagram

DGMTC-07-W-O(I)-20
DGMTC-07-A-O(I)-20
DGMTC-07-B-O(I)-20

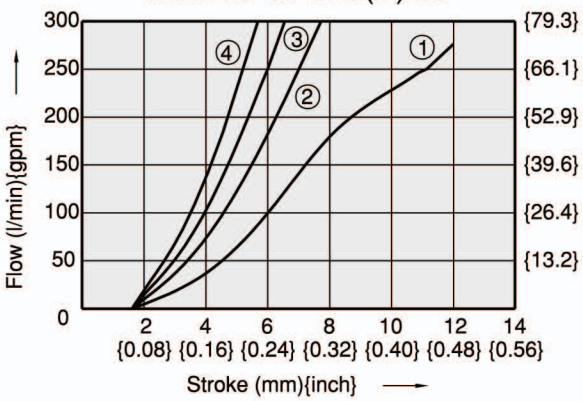

① Pressure Difference= 10 bar{143psi}
② Pressure Difference= 15 bar{214psi}
③ Pressure Difference= 50 bar{714psi}
④ Pressure Difference= 140 bar{2000psi}

Dimensions : EDGMTC07 Size 16

DGMTC-07-W-O-20

3rd angle projection

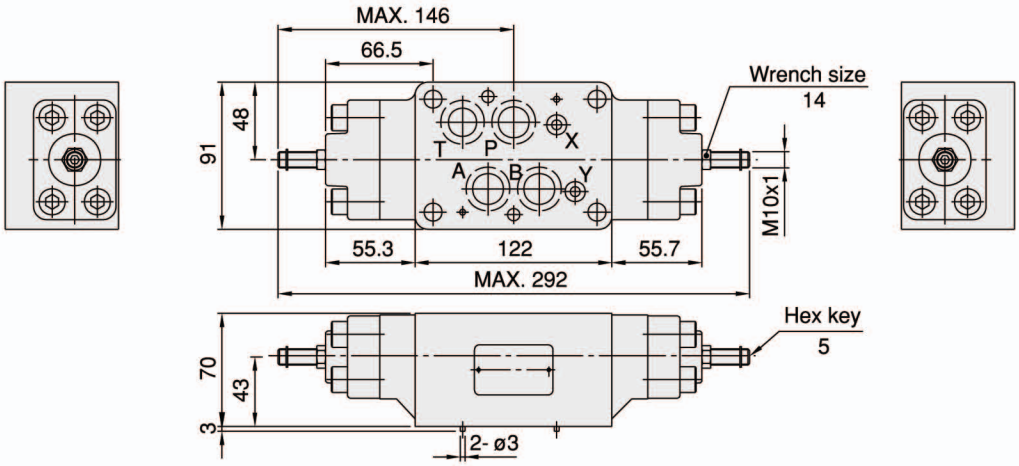

DGMTC-07-A-O-20

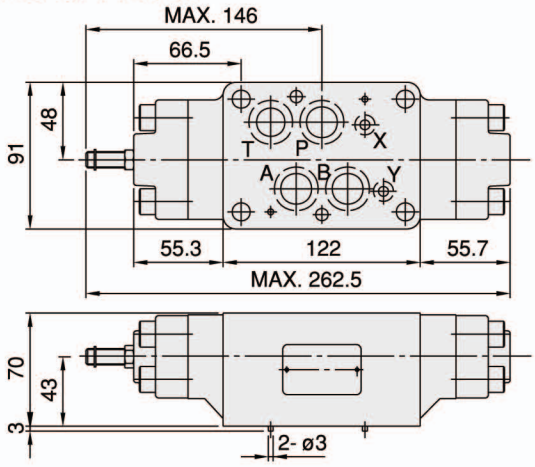

DGMTC-07-B-O-20

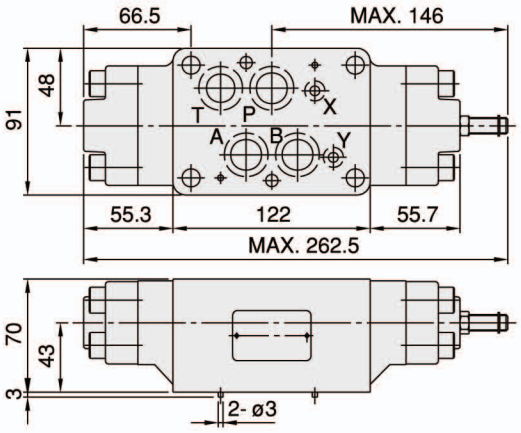

Cross Section Drawing :

DGMTC-07-A-O-20

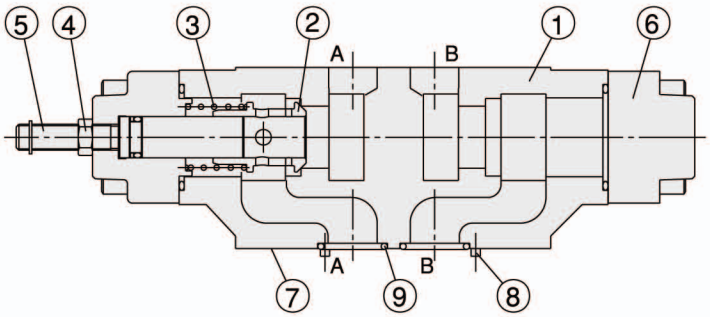

1. Body
2. Throttle
3. Spring
4. Locking nut
5. Setting screw
6. Cover
7. Connections to DIN 24340 from A16; 6 through holes for fixing screws
8. 2 locating pins
9. O-ring:
   Ports A,B,P,T: AS568-118(NBR,Hs90);
   Ports X,Y: AS568-013(NBR,Hs90)

Dimensions : EDGMTC07 Size 16

DGMTC-07-W-I-20

3rd angle projection

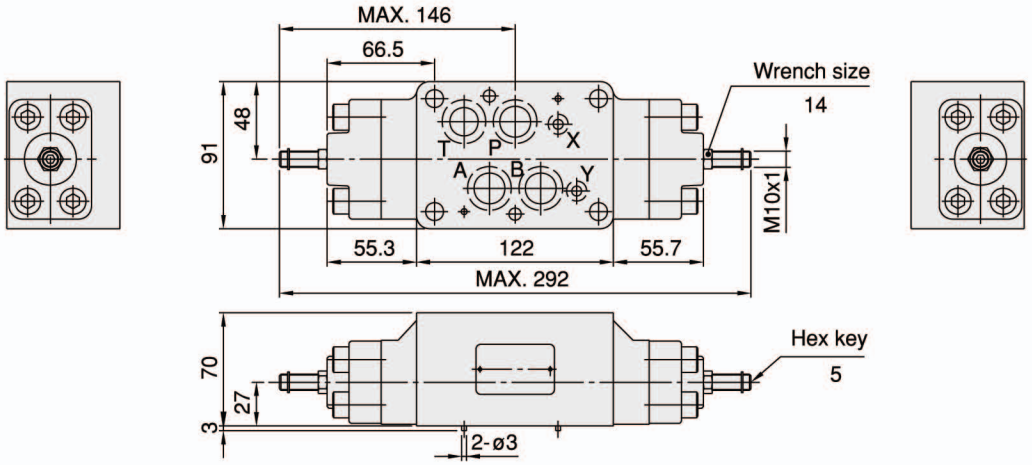

DGMTC-07-A-I-20

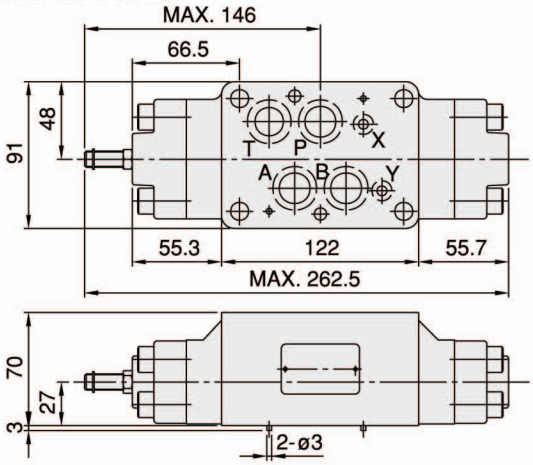

DGMTC-07-B-I-20

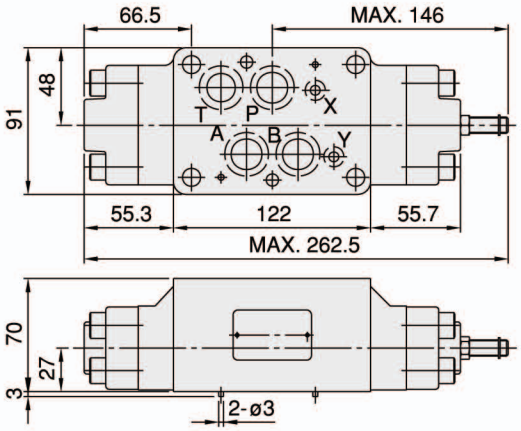

Cross Section Drawing :

DGMTC-07-A-I-20

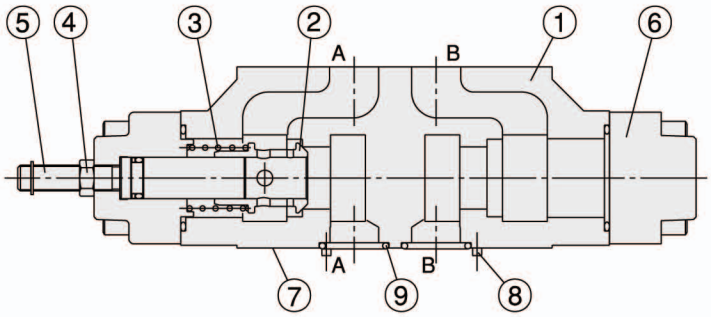

1. Body
2. Throttle
3. Spring
4. Locking nut
5. Setting screw
6. Cover
7. Connections to DIN 24340 from A16; 6 through holes for fixing screws
8. 2 locating pins
9. O-ring:
   Ports A,B,P,T: AS568-118(NBR,Hs90);
   Ports X,Y: AS568-013 (NBR,Hs90)

Characteristics :

EDGMCV07 Size 16

- Highest performance in NG 16.
- Sandwich plate design for use in vertical stacking assemblies.
- Direct operated check valve.
- Three different isolating functions.
- Connections to DIN,ISO and CETOP.

Model: DGMCV-07-P-1-10

Specification :

Maximum flow		300 ℓ/min{79.3 GPM}
Maximum operating pressure		320 bar{4570 PSI}
Pressure adjusting range		1: 0.4 bar{5.7 PSI}
		2: 3.5 bar{50 PSI}
		3: 5.0 bar{71 PSI}
Ambient temperature range		-20˚C~+50˚C
Hydraulic fluid temperature		-20˚C~+70˚C
Viscosity range		15~400 mm²/s
Hydraulic oil		ISO VG 32,46,68
Fluid cleanliness		NAS Class 9 MAX.
Mounting pattern		ISO 4401-AD-07-4-A
Weight	P type	4.5 kg
	A type	4.5 kg
	T type	6.5 kg

Installation Dimensions :

(Machined valve mounting face with poisition of ports)

Mounting Surface: ISO 4401-AD-07-4-A

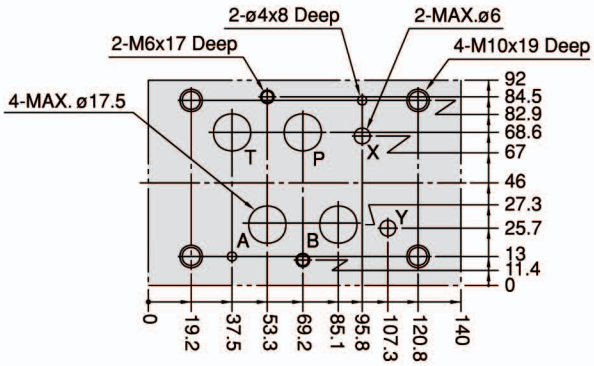

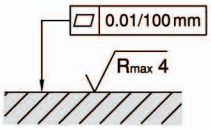

Required surface finish of mating piece when fitting the valve without subplate

Hydraulic Configuration :

DGMCV-07-P- ∗-10

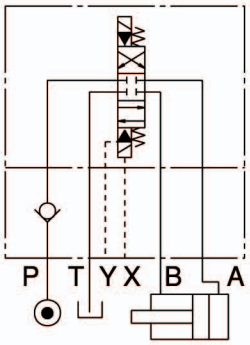

DGMCV-07-T- ∗-10

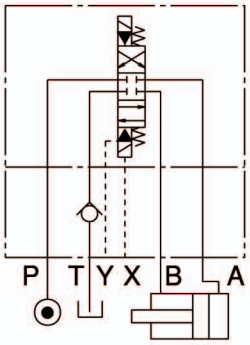

DGMCV-07-A- ∗-10

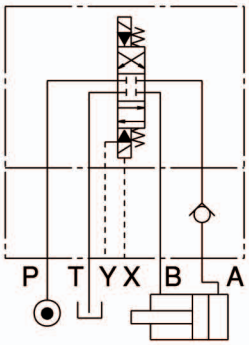

Ordering Code : EDGMCV07 Size 16

DGM CV - 07 - P - 1 - 10 - ∗∗

1 2 3 4 5 6 7

1 Sandwich Plate Design

2 Check Valve

3 Nominal Valve Size

- Nominal valve size: NG 16, CETOP 7 and ISO 4401-07.

4 Configuration

- P: single; acting on port P.
- T: single; acting on port T.
- A: single; acting on port A.

5 Spring Cracking Pressure

- 1: 0.4 bar.
- 2: 3.5 bar.
- 3: 5.0 bar.

6 Design Number

7 Optional Inquiry

Performance Curves :

Viscosity of Hydraulic Fluid: 32 mm²/s

Pressure Drop Characteristic

DGMCV-07-P- ∗-10

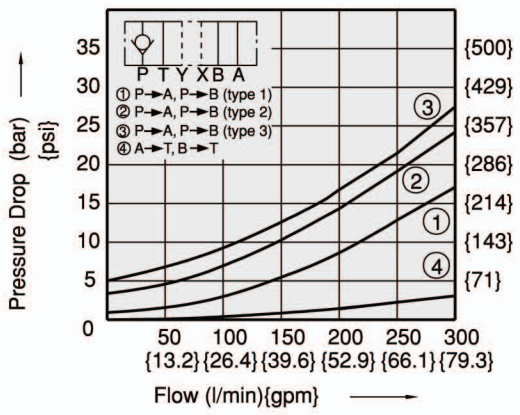

DGMCV-07-T- ∗-10

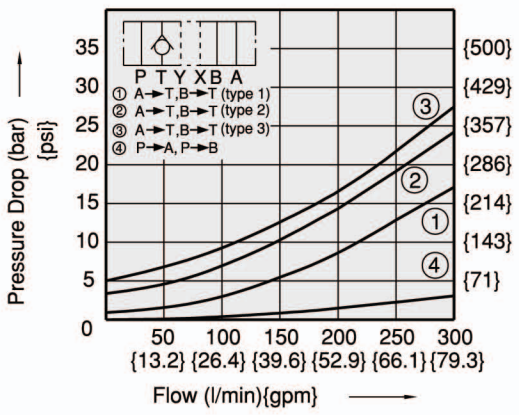

Dimensions : EDGMCV07 Size 16

DGMCV-07-P- ∗-10

DGMCV-07-A- ∗-10

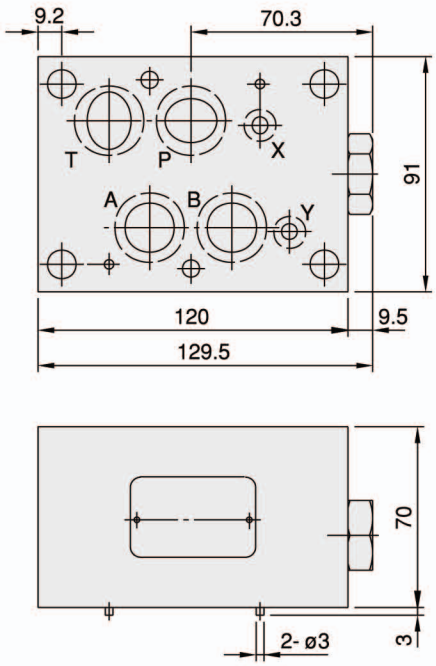

DGMCV-07-T- ∗-10

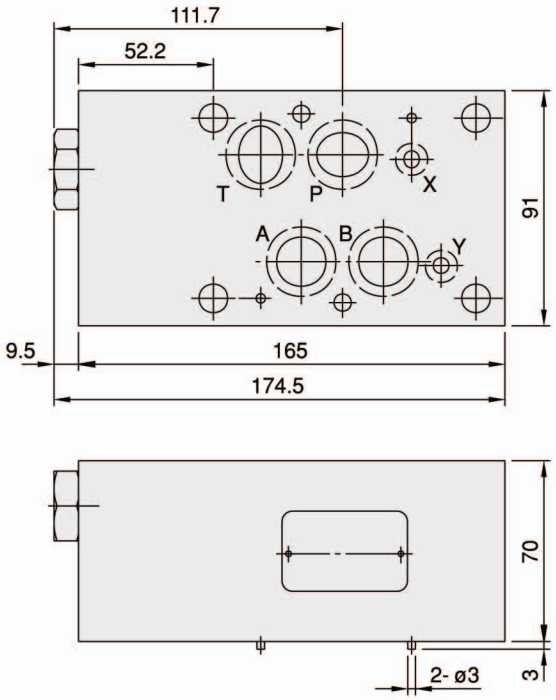

Cross Section Drawing :

DGMCV-07-P- ∗-10

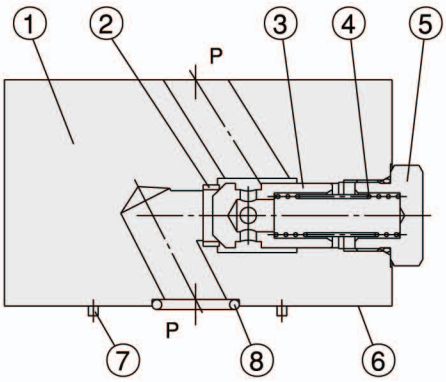

1. Body
2. Seat
3. Poppet
4. Spring
5. Nut
6. Connections to DIN 24340 from A16;
   6 through holes for fixing screws
7. 2 locating pins
8. O-ring:
   Ports A,B,P,T: AS568-118(NBR,Hs90);
   Ports X,Y: AS568-013(NBR,Hs90)

EDGMPD07 Size 16

Characteristics :

- Highest performance in NG 16.
- Sandwich plate design.
- Pilot operated check valve with decompression.
- For leak free sealing of one or two actuator ports.
- Connections to DIN, ISO and CETOP.

Model: DGMPD-07-W-1-10

Specification :

Maximum flow		300 ℓ/min{79.3 GPM}
Maximum operating pressure		320 bar{4570 PSI}
Spring cracking pressure		1: 2 bar{29 PSI}
		2: 5 bar{71 PSI}
Area ratio	Pilot piston	1
	Check valve seat	0.5
	Needle valve seat	0.07
Ambient temperature range		-20˚C~+50˚C
Hydraulic fluid temperature		-20˚C~+70˚C
Viscosity range		15~400 mm²/s
Hydraulic oil		ISO VG 32,46,68
Fluid cleanliness		NAS Class 9 MAX.
Mounting pattern		ISO 4401-AD-07-4-A
Weight	W type	7.0 kg
	A type	7.0 kg
	B type	7.0 kg

Installation Dimensions :

(Machined valve mounting face with poisition of ports)

Mounting Surface: ISO 4401-AD-07-4-A

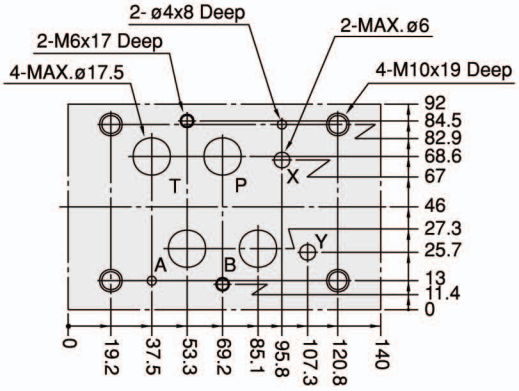

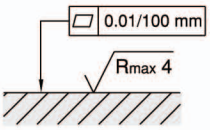

Required surface finish of mating piece when fitting the valve without subplate

Hydraulic Configuration :

DGMPD-07-W- ∗-10

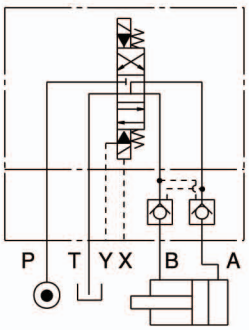

DGMPD-07-A- ∗-10

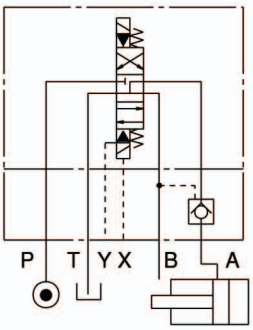

DGMPD-07-B- ∗-10

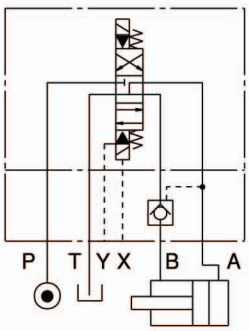

Ordering Code : EDGMPD07 Size 16

DGM	PD	-	07	-	W	-	1	-	10	-	＊＊
1	2		3		4		5		6		7

1 Sandwich Plate Design

2 Pilot Operated Check Valve with Decompression

3 Nominal Valve Size

- Nominal valve size: NG 16, CETOP 7 and ISO 4401-07.

4 Configuration

- W: double: acting on ports A and B.
- A: single; acting on port A.
- B: single; acting on port B.

5 Spring Cracking Pressure

- 1: 2 bar.
- 2: 5 bar.

6 Design Number

7 Optional Inquiry

Performance Curves :

Viscosity of Hydraulic Fluid: 32 mm²/s

Pressure Drop Characteristic

DGMPD-07-W- ＊-10

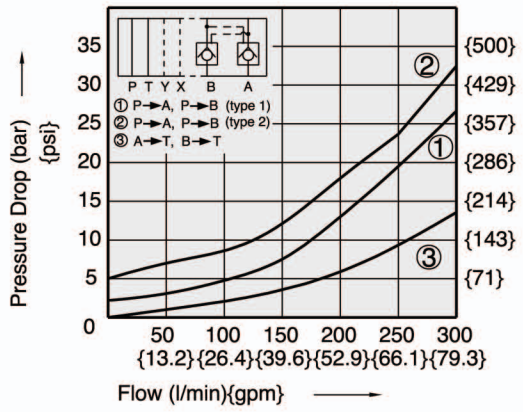

Min. Pilot Pressure Characteristic

DGMPD-07-W- ＊-10

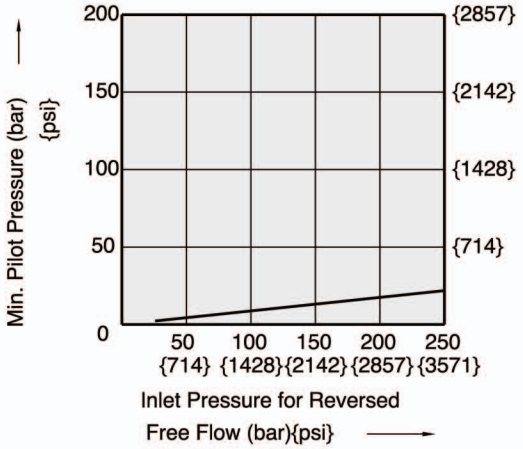

EDGMGV03 Size 6

Characteristics :

- Highest performance in NG 6.
- Direct operated pressure reducing valve.
- Sandwich plate design.
- 4 pressure adjusting ranges.
- 3 optional effective directions of flow.
- Pressure reduction in ports A, B or P.
- Connections to DIN, ISO and CETOP.

Model: DGMGV-03-P-1-10

Specification :

Maximum flow		40 ℓ /min {10.6 GPM}
Maximum operating pressure		320 bar {4570 PSI}
Pressure adjusting range		0: 1.5~35 bar
		1: 7~70 bar
		2: 7~140 bar
		3: 7~210 bar
Ambient temperature range		-20˚C~+50˚C
Hydraulic fluid temperature		-20˚C~+70˚C
Viscosity range		15~400 mm²/s
Hydraulic oil		ISO VG 32, 46, 68
Fluid cleanlinss		NAS Class 9 MAX.
Mounting pattern		ISO 4401-AB-03-4-A
Weight	P type	1.3 Kg
	A type	1.3 Kg
	B type	1.3 Kg

Installation Dimensions :

(Machined valve mounting face with poisition of ports)

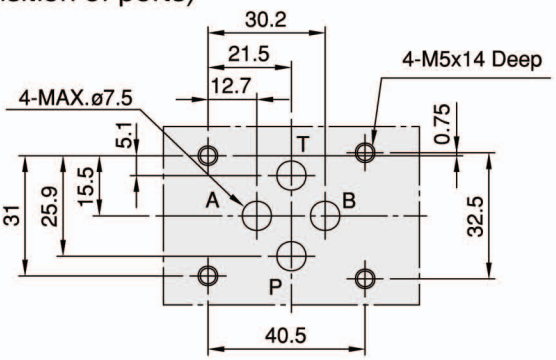

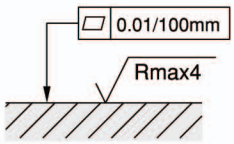

Required surface finish of mating piece

Hydraulic Configuration :

DGMGV-03-P- ∗-10

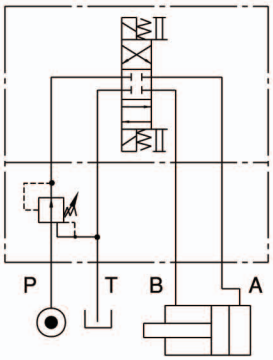

DGMGV-03-A- ∗-10

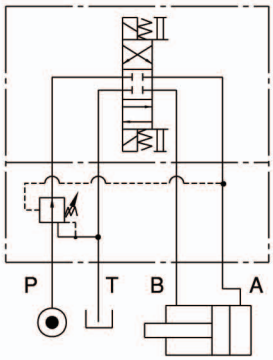

DGMGV-03-B- ∗-10

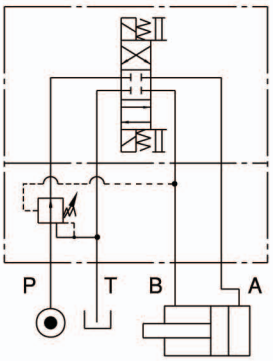

Dimensions : EDGMPD07 Size 16

DGMPD-07-W- ∗-10

DGMPD-07-A- ∗-10

DGMPD-07-B- ∗-10

3rd angle projection

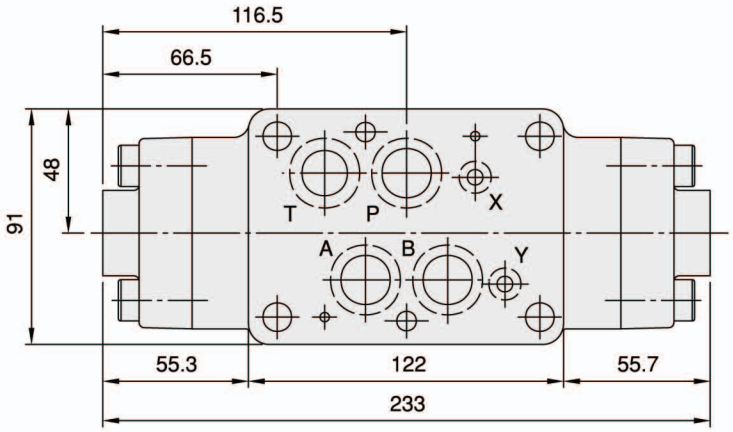

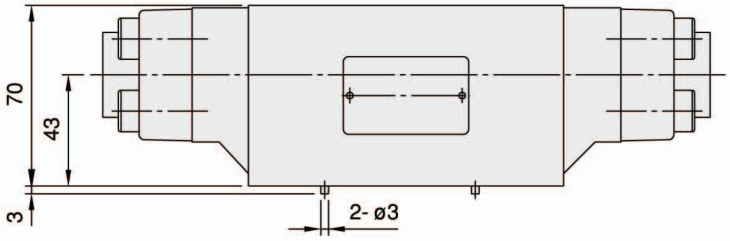

Cross Section Drawing :

DGMPD-07-A- ∗-10

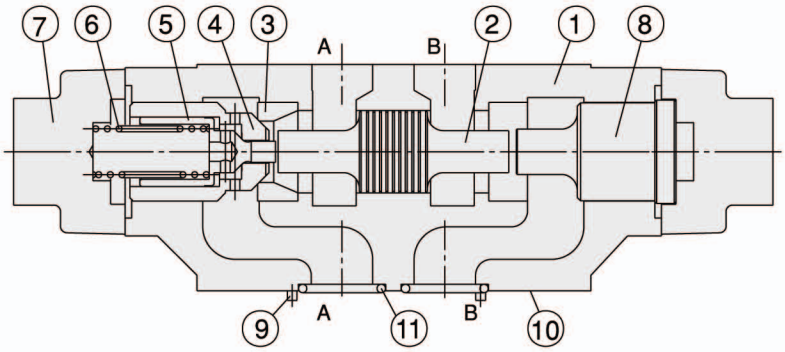

1. Body
2. Spool
3. Seat
4. Poppet-1
5. Poppet-2
6. Spring
7. Cover
8. Bushing
9. 2 locating pins
10. Connections to DIN 24340 from A16; 6 through holes for fixing screws
11. O-ring:
    Ports A,B,P,T: AS568-118(NBR,Hs90);
    Ports X,Y: AS568-013(NBR,Hs90)

Hexagon Socket Head Bolt: 07 Size 16

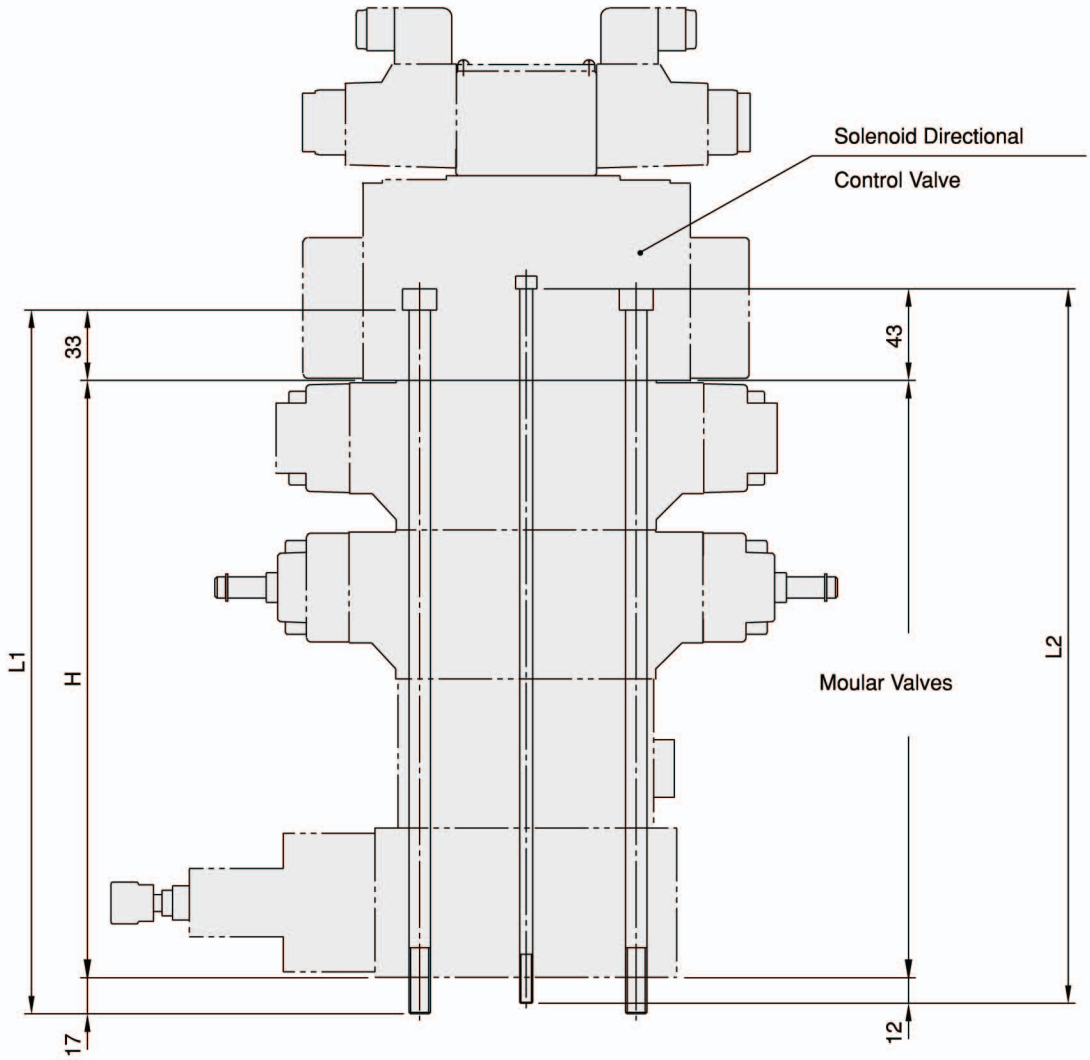

Numbers of the moular valves	H	L1	L2	Bolt length	
				Metric	Inch
1	70	120	125	M10x120Lx4 pcs.	3/8"~16UNCx4-5/8"Lx4 pcs.
				M6x125Lx2 pcs.	1/4"~20UNCx4-7/8"Lx2 pcs.
2	140	190	195	M10x190Lx4 pcs.	3/8"~16UNCx7-3/8"Lx4 pcs.
				M6x195Lx2 pcs.	1/4"~20UNCx7-5/8"Lx2 pcs.
3	210	260	265	M10x260Lx4 pcs.	3/8"~16UNCx10-1/8"Lx4 pcs.
				M6x265Lx2 pcs.	1/4"~20UNCx10-1/2"Lx2 pcs.
4	280	330	335	M10x330Lx4 pcs.	3/8"~16UNCx13"Lx4 pcs.
				M6x335Lx2 pcs.	1/4"~20UNCx13-1/4"Lx2 pcs.

Ordering Code : EDGMGV03 Size 6

DGM	GV	-	03	-	P	-	1	-	10	-	＊＊
1	2		3		4		5		6		7

1 Sandwich Plate Design

2 Pressure Reducing Valve

3 Nominal Valve Size

- Nominal valve size: NG 6, CETOP 3 and ISO 4401-03.

4 Configuration

- P: reduced pressure on P port.
- A: reduced pressure on A port.
- B: reduced pressure on B port.

5 Pressure Adjusting Range

- 0: 1.5~35 bar.
- 1: 7~70 bar.
- 2: 7~140 bar.
- 3: 7~210 bar.

6 Design Number

- 10: with handle.
- 20: without handle.

7 Optional Inquiry

- A: handle on A port side.

Performance Curves :

Viscosity of Hydraulic Fluid: 32 mm²/s

Pressure Drop Characteristic

DGMGV-03-P- ＊-10

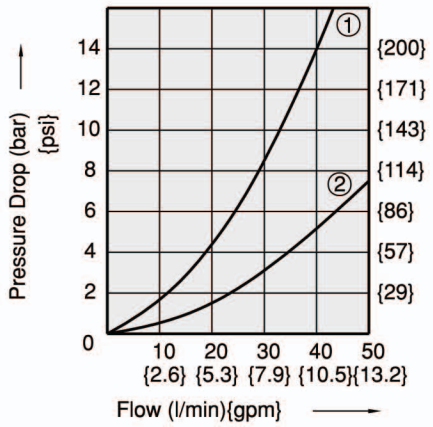

Regulated Pressure Versus Flow Diagram

DGMGV-03-P- ＊-10

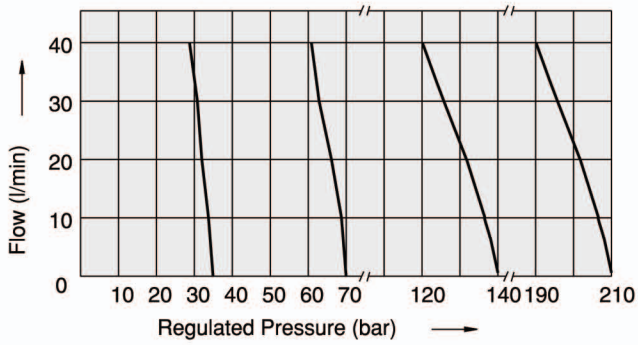

1. differential pressure variation versus variation of flow between inlet port and use port
2. differential pressure variation versus variation of between use port and discharge port

Dimensions : EDGMGV03 Size 6

DGMGV-03-P- ∗-10
DGMGV-03-A- ∗-10

3rd angle projection

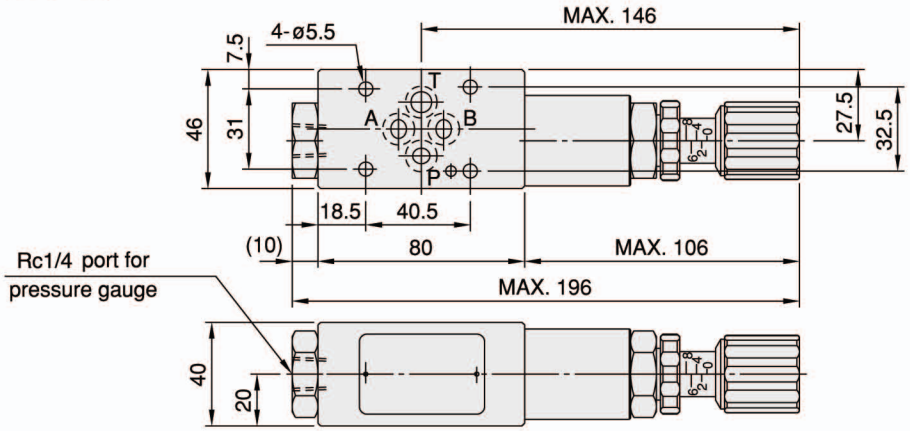

DGMGV-03-B- ∗-10

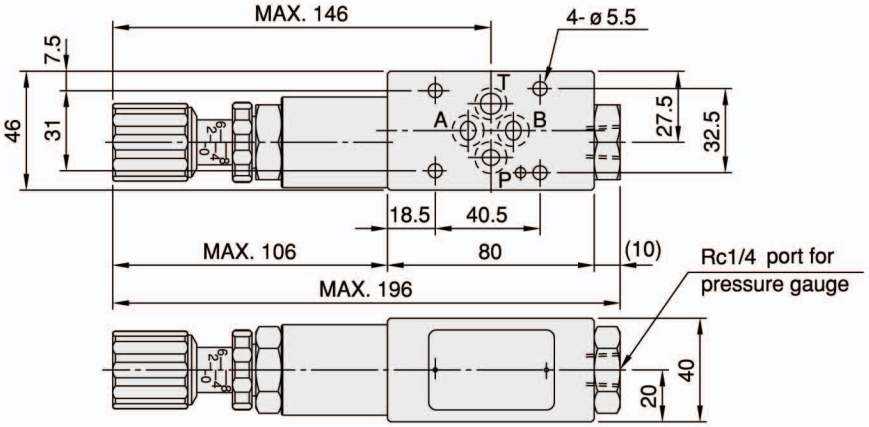

DGMGV-03- ∗- ∗-20

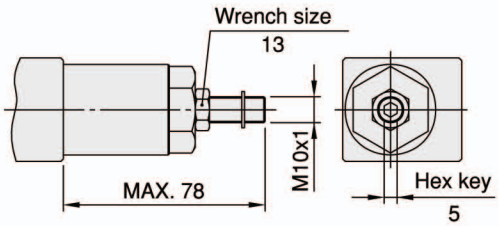

Cross Section Drawing :

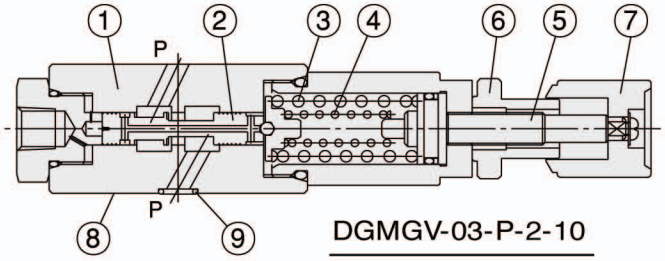

DGMGV-03-P-2-10

1. Body.
2. Spool.
3. Adjustment spring 1.
4. Adjustment spring 2.
5. Setting screw.
6. Locking nut.
7. Adjustment element.
8. Connections to DIN 24340 from A6; valve fixing screws M5 DIN 912-10.9, tightening torque 8~9 Nm.
9. O-ring 1B-P9 for ports A, B, P and T.

EDGMCB03 Size 6

Characteristics :

- Highest performance in NG 6.
- Direct operated pressure counter balance valve.
- Used for actuator back pressure control.
- Sandwich plate design.
- 2 pressure adjusting ranges.
- Connections to DIN, ISO and CETOP.

Model: DGMCB-03-A1-1-10

Specification :

Maximum flow		40 ℓ /min {10.6 GPM}
Maximum operating pressure		320 bar {4570 PSI}
Pressure adjusting range		1: 8~70 bar
		2: 35~140 bar
Ambient temperature range		-20˚C~+50˚C
Hydraulic fluid temperature		-20˚C~+70˚C
Viscosity range		15~400 mm²/s
Hydraulic oil		ISO VG 32, 46, 68
Fluid cleanliness		NAS Class 9 MAX.
Mounting pattern		ISO 4401-AB-03-4-A
Weight	A type	1.1 Kg
	B type	1.1 Kg

Installation Dimensions :

(Machined valve mounting face with poisition of ports)

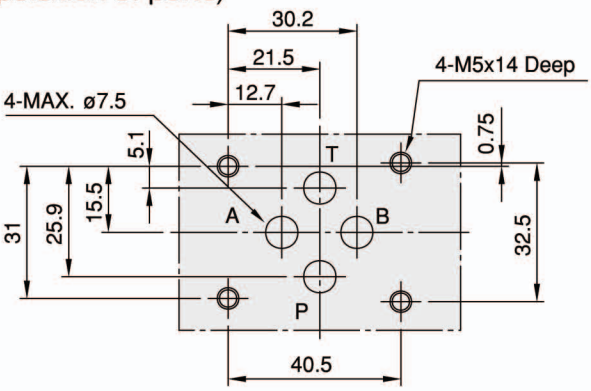

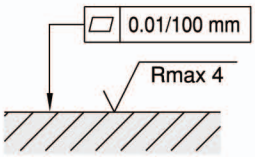

Required surface finish of mating piece

Hydraulic Configuration :

DGMCB-03-A1- ∗-10

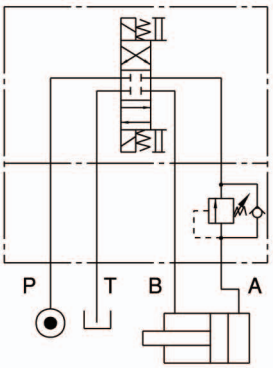

DGMCB-03-B1- ∗-10

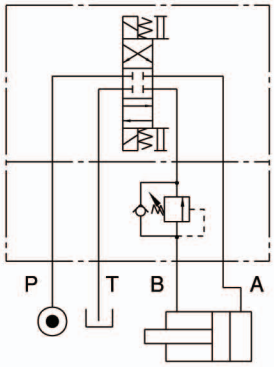

Ordering Code : EDGMCB03 Size 6

DGM	CB	-	03	-	A1	-	1	-	10	-	＊＊
1	2		3		4 5		6		7		8

1 Sandwich Plate Design

2 Pressure Counter Balance Valve

3 Nominal Valve Size

- Nomimal valve size: NG 6, CETOP 3 and ISO 4401-03.

4 Control Port

- A: A port; B: B port.

5 Control Type

- 1: intenal pilot, internal drain.

6 Pressure Adjusting Range

- 1: 8~70 bar.
- 2: 35~140 bar.

7 Design Number

- 10: with handle.
- 20: without handle.

8 Optional Inquiry

Performance Curves :

Viscosity of Hydraulic Fluid: 32 mm²/s

Pressure Drop Characteristic

DGMCB-03-A1- ＊-10

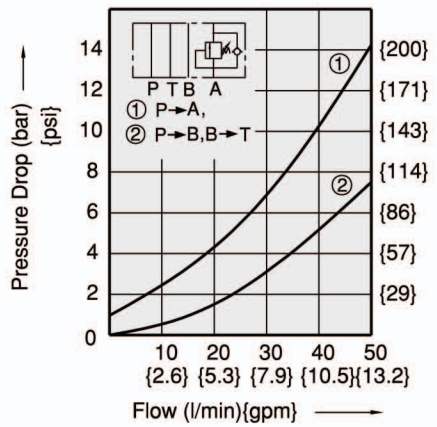

Regulated Pressure Versus Flow Diagram

DGMCB-03-A1- ＊-10
DGMCB-03-B1- ＊-10

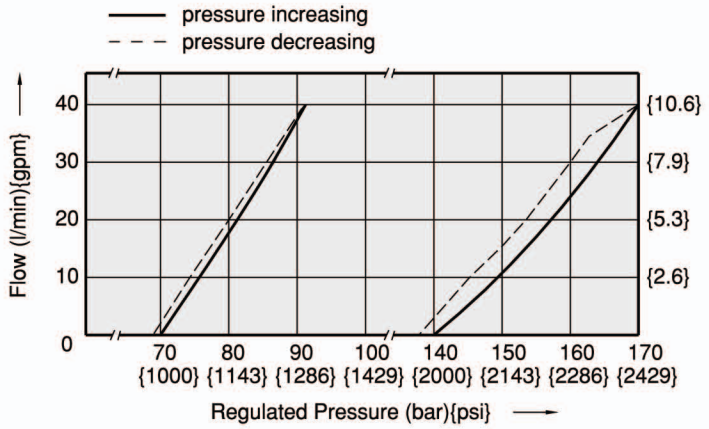

Dimensions : EDGMCB03 Size 6

DGMCB-03-A1- ∗-10

3rd angle projection

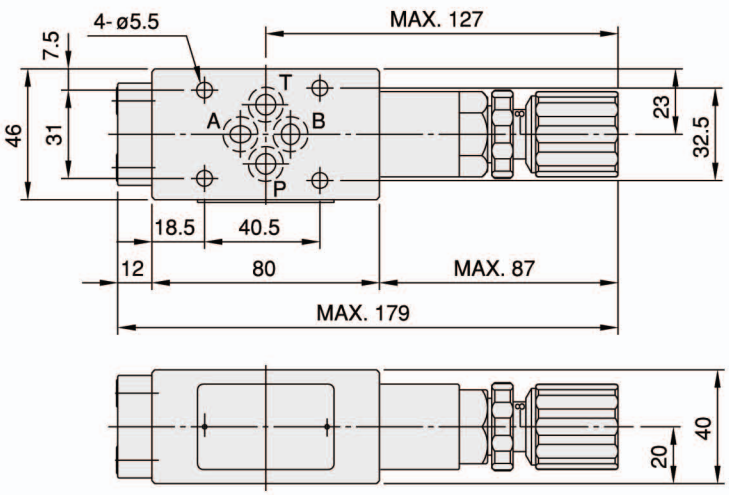

DGMCB-03-B1- ∗-10

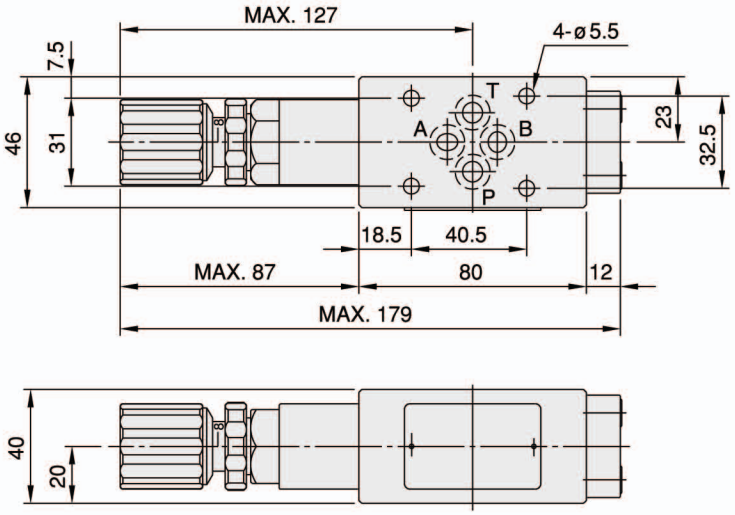

DGMCB-03- ∗- ∗-20

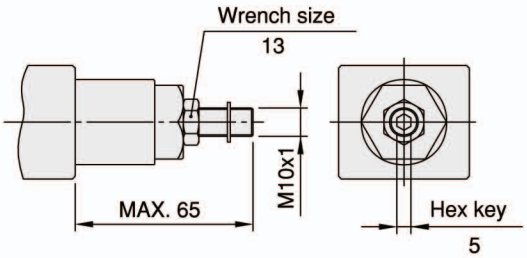

Cross Section Drawing :

DGMCB-03-A1- ∗-10

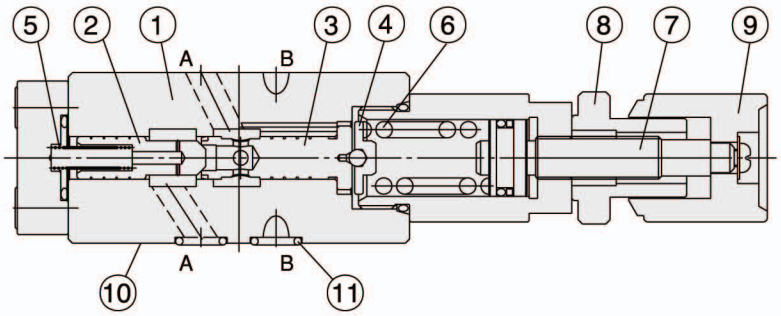

1. Body.
2. Poppet.
3. Spool.
4. Retainer.
5. Poppet spring.
6. Adjustment spring.
7. Setting screw.
8. Locking nut.
9. Adjustment element.
10. Connections to DIN 24340 from A6; valve fixing screws M5 DIN 912-10.9, tightenting torque 8~9Nm.
11. O-ring 1B-P9 for ports A, B, P and T.

EDGMSV03 Size 6

Characteristics :

- Higest performance in NG 6.
- Direct operated pressure sequence valve.
- Sandwich plate design.
- 2 pressure adjusting ranges.
- Connections DIN, ISO and CETOP.

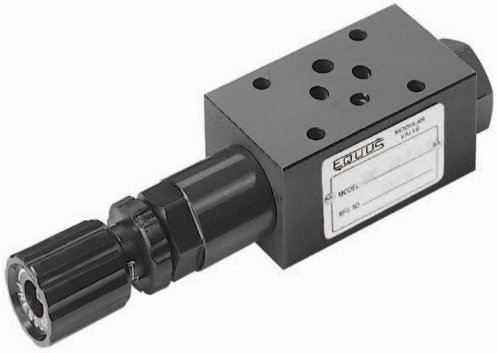

Model: DGMSV-03-P2-1-10

Specification :

Maximum flow	40 ℓ/min {10.6 GPM}
Maximum operating pressure	320 bar {4750 PSI}
Pressure adjusting range	1: 8~70 bar
	3: 35~210 bar
Ambient temperature range	-20˚C~+50˚C
Hydraulic fluid temperature	-20˚C~+70˚C
Viscosity range	115~400 mm²/s
Hydraulic oil	ISO VG 32, 46, 68
Fluid cleanliness	NAS Class 9 MAX.
Mounting pattern	ISO 4401-AB-03-4-A
Weight	1.3 Kg

Hydraulic Configuration :

DGMSV-03-P2- ∗-10

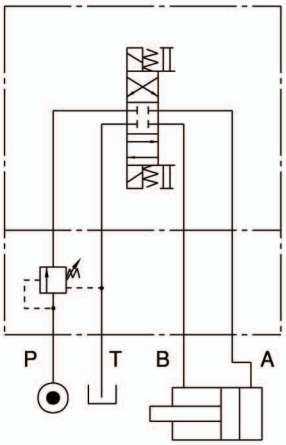

Installation Dimensions :

(Machined valve mounting face with poisition of ports)

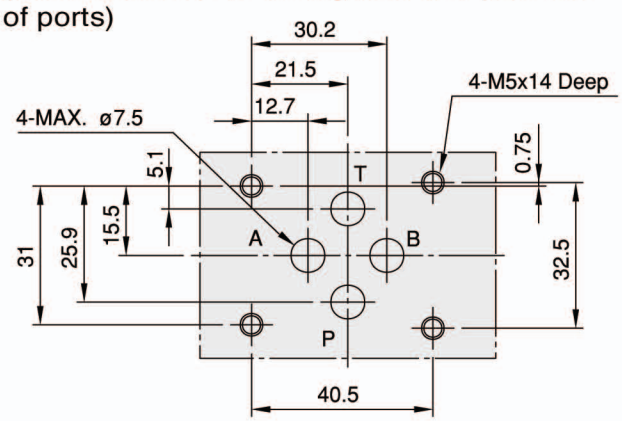

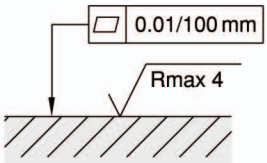

Required surface finish of mating piece

Ordering Code : EDGMSV03 Size 6

DGM SV - 03 - P2 - 1 - 10 - ＊＊

1 2 3 4 5 6 7 8

1 Sandwich Plate Design

2 Pressure Sequence Valve

3 Nominal Valve Size

- Nominal valve size: NG 6, CETOP 3 and ISO 4401-03.

4 Control Port

- P: P port

5 Control Type

- 2: internal pilot, external drain

6 Pressure Adjusting Range

- 1: 8~70 bar.
- 3: 35~210 bar.

7 Design Number

- 10: with handle.
- 20: without handle.

8 Optional Inquiry

Performance Curves :

Viscosity of Hydraulic Fluid: 32 mm²/s

Pressure Drop Characteristic

DGMSV-03-P2- ＊-10

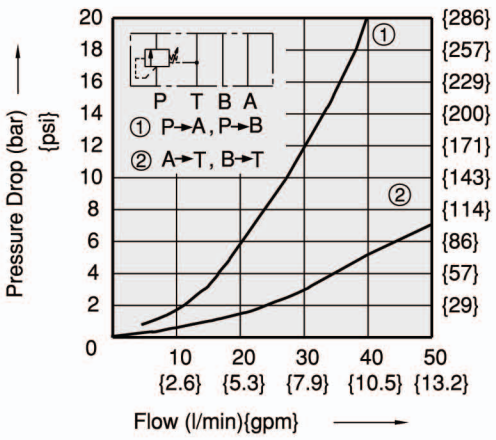

Regulated Pressure Versus Flow Diagram

DGMSV-03-P2- ＊-10

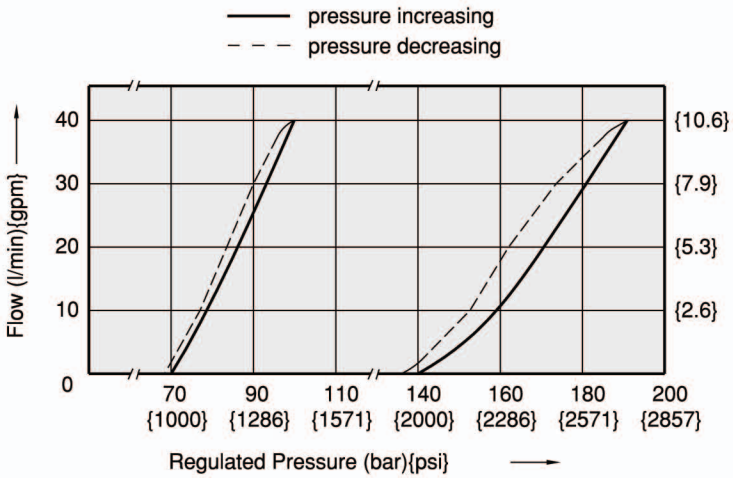

Dimensions : EDGMSV03 Size 6

3rd angle projection

DGMSV-03-P2- ∗-10

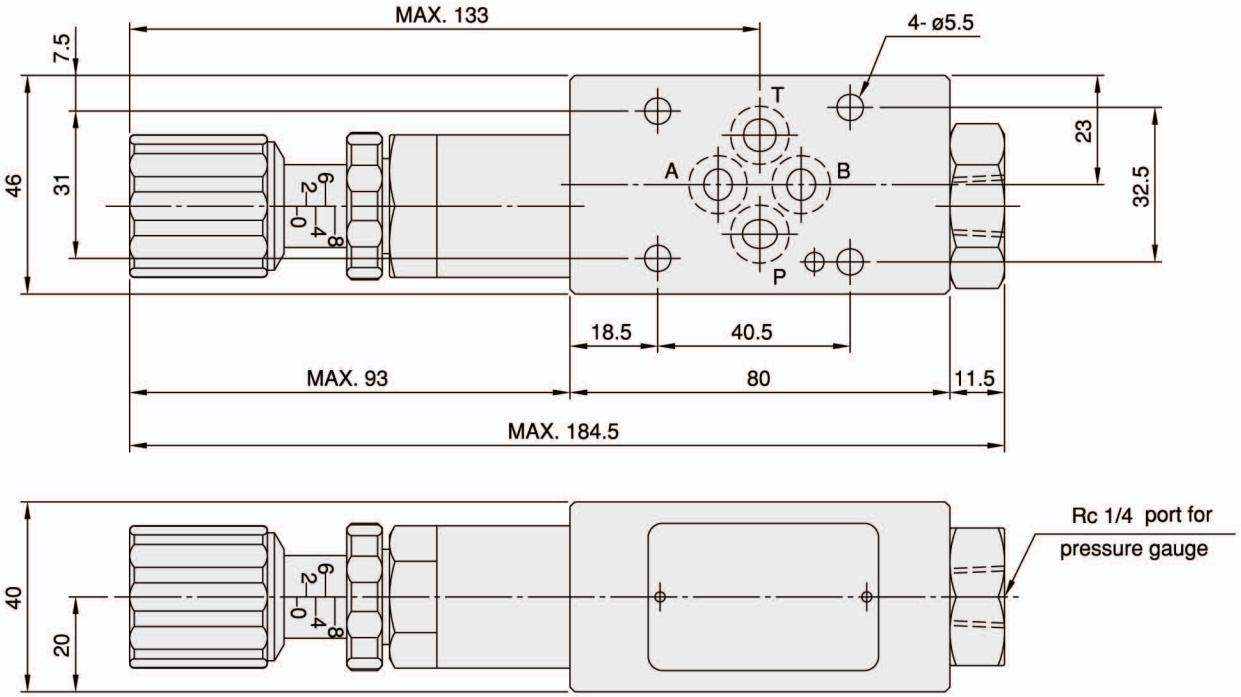

DGMSV-03-P2- ∗-20

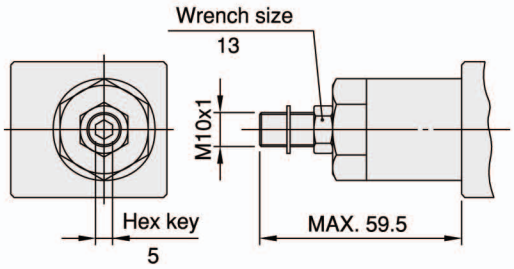

Cross Section Drawing :

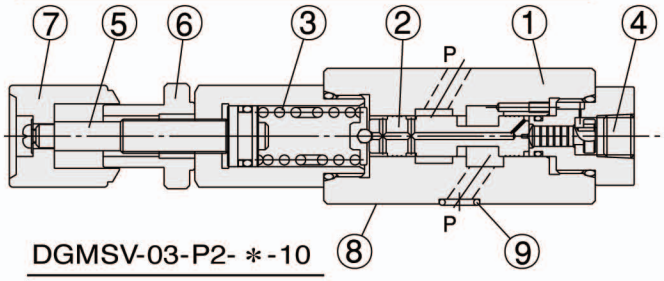

DGMSV-03-P2- ∗-10

1. Body.
2. Spool.
3. Adjustment spring.
4. Pressure gauge port. Rc1/4"
5. Setting screw.
6. Locking nut.
7. Adjustment element.
8. Connections to DIN 24340 from A6; valve fixing screws M5 DIN 912-10.9, tightening torque 8~9 Nm.
9. O-ring 1B-P9 for port A, B, P and T.

Care in Application : 03 Size 6

Valve Name	Wrong Example	Correct Example	Instructions
Solenoid operated directional control valve Pilot operated check valve (DGMPC-03-W-∗-10) Pressure reducing valve (DGMGV-03-B-∗-10)	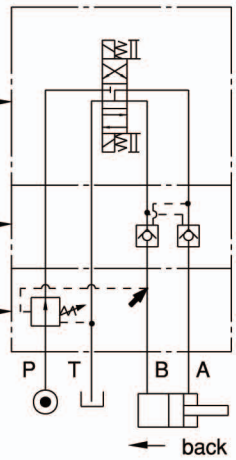	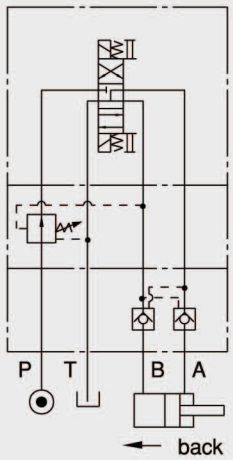	When DGMGV-03-B and DGMPC-03-W are used together in the same circuit, the right circuit is correct, and the left is wrong, as DGMPC-03-W would not be totally closed.
Solenoid operated directional control valve Flow regulator with metered out check (DGMTC-03-W-O-10) Pilot operated check valve (DGMPC-03-W-∗-10)	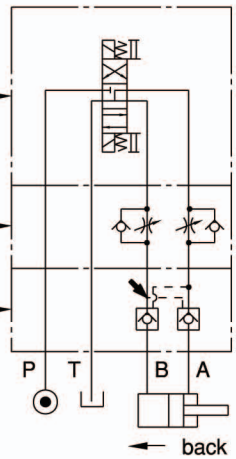	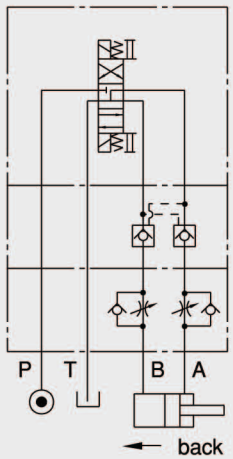	When DGMTC-03-W-O and DGMPC-03-W and used together in the same circuit , DGMTC-03-W-O should be installed closer to the cylinder ports, otherwise the cylinder may have a "Knocking" phenomenon happened.
Solenoid operated directional control valve Flow regulator with metered out check (DGMTC-03-W-O-10) Pressure reducing valve (DGMGV-03-B-∗-10)	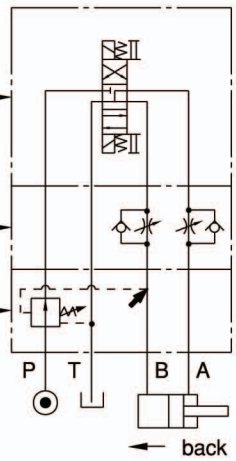	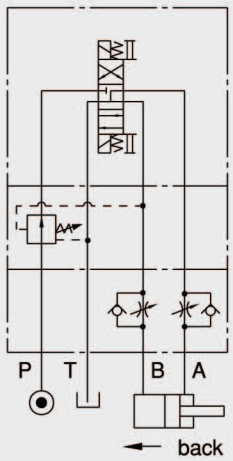	When DGMGV-03-B and DGMTC-03-W-O are used together in the same circuit, the right circuit is correct, and the left is wrong, as the function of DGMGV-03-B will be affected when oil flow from B port to T port. Because DGMTC-03-W-O will create a pressure which will cause DGMGV-03-B to reduce the pressure too low, and the cylinder then can not operate with enough force or move smoothly.

Characteristics :

- Highest performance in NG 6.
- Sandwich plate design.
- Be used for actuator speed control.
- Connections to DIN, ISO and CETOP.

EDGMTV03 Size 6

Model: DGMTV-03-P-10

Specification :

Maximum flow		50 ℓ /min {13.2 GPM}
Maximum operating pressure		320 bar {4570 PSI}
Ambient temperature range		-20˚C~+50˚C
Hydraulic fluid temperature		-20˚C~+70˚C
Viscosity range		15~400 mm²/s
Hydraulic oil		ISO VG 32, 46, 68
Fluid cleanliness		NAS Class 9 MAX.
Mounting pattern		ISO 4401-AB-03-4-A
Weight	P type	0.99 Kg
	T type	0.99 Kg

Hydraulic Configuration :

DGMTV-03-P-10

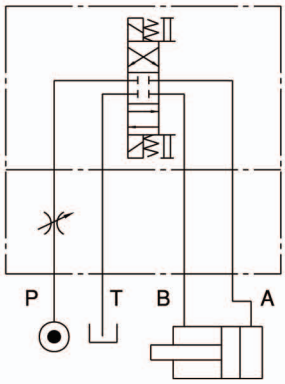

DGMTV-03-T-10

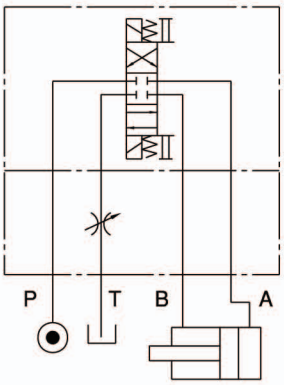

Installation Dimensions :

(Machined valve mounting face with poisition of ports)

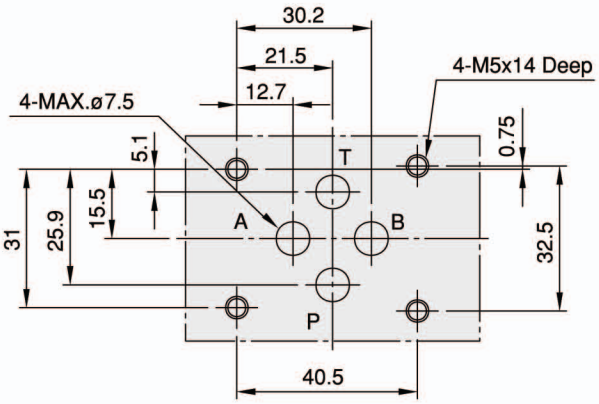

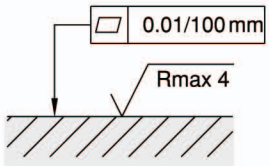

Required surface finish of mating piece

Ordering Code : EDGMTV03 Size 6

DGM	TV	-	03	-	P	-	10	-	* *
1	2		3		4		5		6

1 Sandwich Plate Design

2 Flow Regulator Valve

3 Nominal Valve Size

- Nominal valve size: NG 6, CETOP 3 and ISO 4401-03.

4 Configuration

- P: single; acting on port P.
- T: single; acting on port T.

5 Design Number

- 10: with handle.
- 20: without handle.

6 Optional Inquiry

Performance Curves :

Viscosity of Hydraulic Fluid: 32 mm²/s

Pressure Drop Characteristic

DGMTV-03-P-10

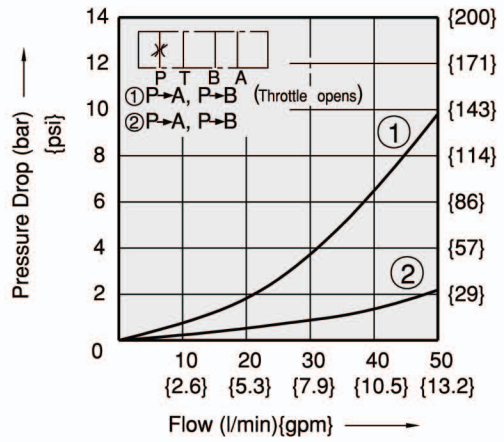

Stroke Versus Flow Diagram

DGMTV-03-P-10
DGMTV-03-T-10

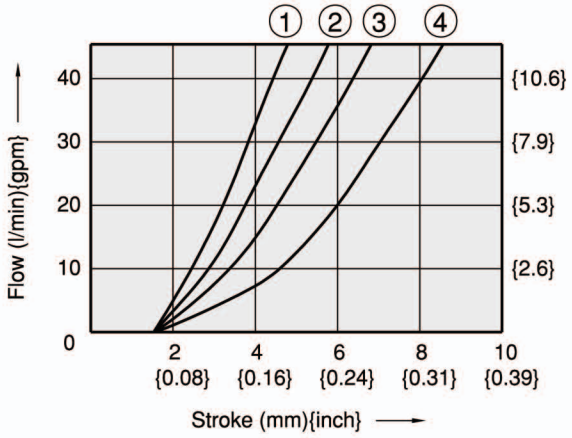

① Pressure Difference=140 bar {2000psi}
② Pressure Difference=70 bar {1000psi}
③ Pressure Difference=35 bar {500psi}
④ Pressure Difference=10 bar {143psi}

Dimensions : EDGMTV03 Size 6

DGMTV-03-P-10

3rd angle projection

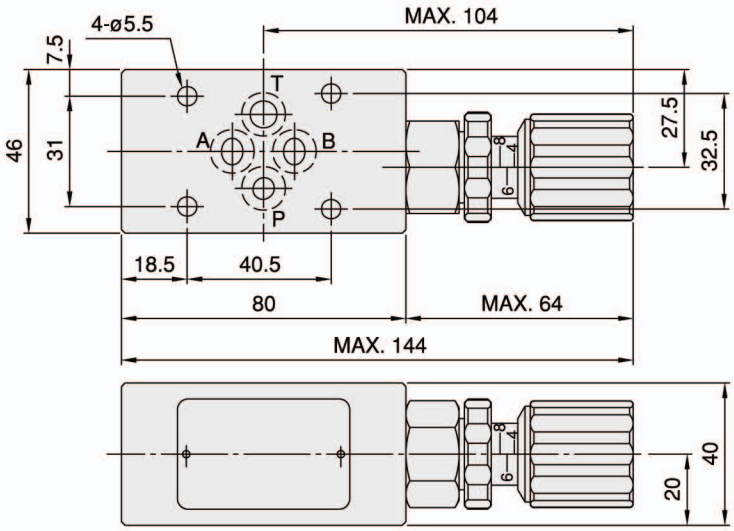

DGMTV-03-T-10

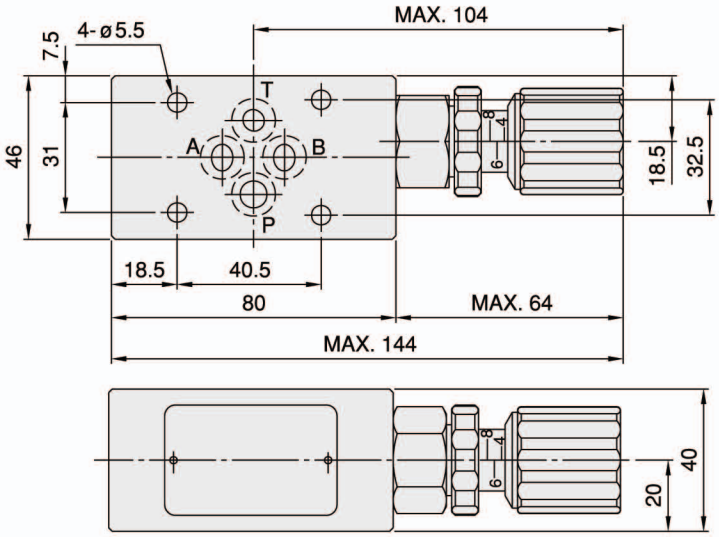

DGMTV-03- ∗-20

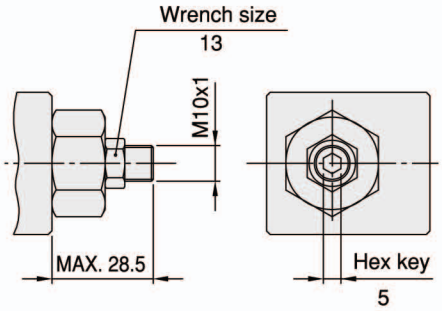

Cross Section Drawing :

DGMTV-03-P-10

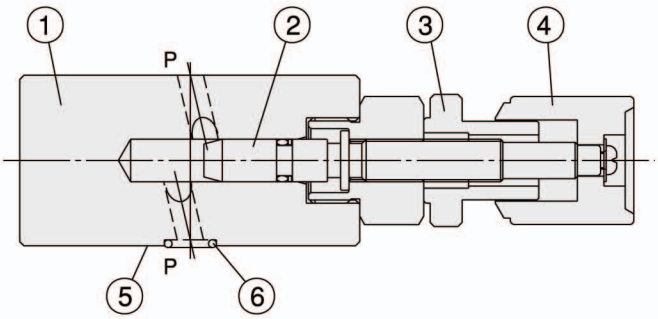

1. Body.
2. Setting screw.
3. Locking nut.
4. Adjustment element.
5. Connections to DIN 24340 from A6; valve fixing screws M5 DIN 912-10.9, tightening torque 8~9 Nm.
6. O-ring 1B-P9 for ports A,B,P and T.

Characteristics :

- Highest performonce in NG 6.
- Sandwich plate design.
- Connections to DIN, ISO and CETOP.

EDGMTC03 Size 6

Model: DGMTC-03-P-10

Specification :

Maximum flow	50 ℓ/min {13.2 GPM}
Maximum operating pressure	320 bar {4570 PSI}
Check valve cracking pressure	0.4 bar {5.7 PSI}
Ambient temperature range	-20˚C~+50˚C
Hydraulic fluid temperature	-20˚C~+70˚C
Viscosity range	15~400 mm²/s
Hydraulic oil	ISO VG 32,46,68
Fluid cleanliness	NAS Class 9 MAX.
Mounting pattern	ISO 4401-AB-03-4-A
Weight	1.0 kg

Hydraulic Configuration :

DGMTC-03-P-10

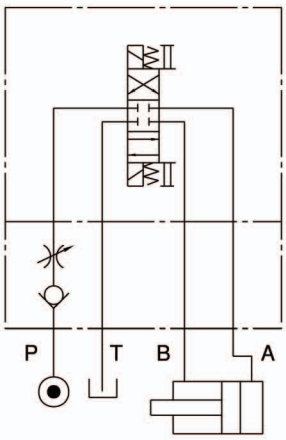

Installation Dimensions :

(Machined valve mounting face with poisition of ports)

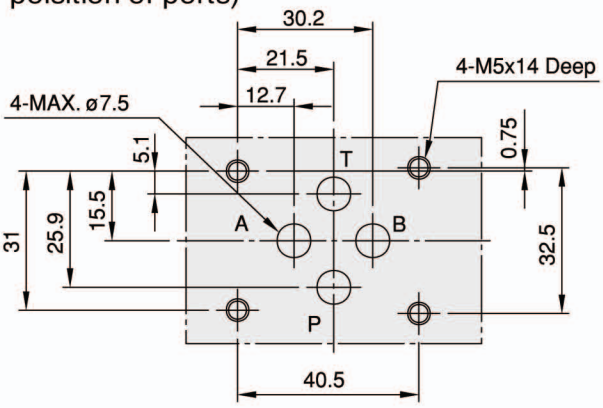

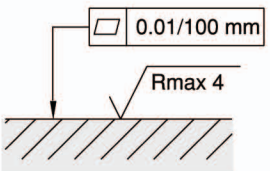

Required surface finish of mating piece

Ordering Code : EDGMTC03 Size 6

DGM TC - 03 - P - 10 - * *

1 2 3 4 5 6

1 Sandwich Plate Design

2 Flow Regulator with Check Valve

3 Nominal Valve Size

- Nominal valve size: NG 6,CETOP 3 and ISO 4401-03.

4 Configuration

- P: single; acting on port P.

5 Design Number

- 10: with handle.
- 20: without handle.

6 Optional Inquiry

Performance Curves :

Viscosity of Hydraulic Fluid: 32 mm²/s

Pressure Drop Characteristic

DGMTC-03-P-10

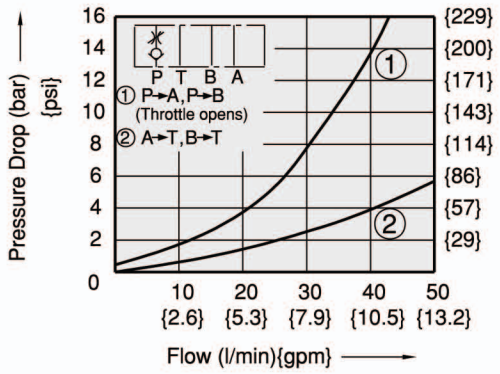

Stroke Versus Flow Diagram

DGMTC-03-P-10

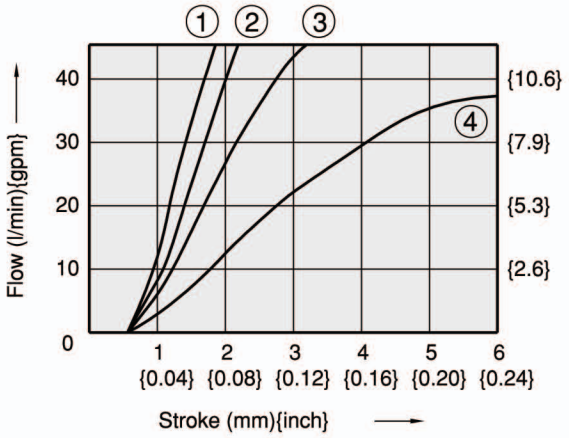

① Pressure Difference=140 bar {2000psi}
② Pressure Difference=70 bar {1000psi}
③ Pressure Difference=35 bar {500psi}
④ Pressure Difference=10 bar {143psi}

Dimensions : EDGMTC03 Size 6

DGMTC-03-P-10

3rd angle projection

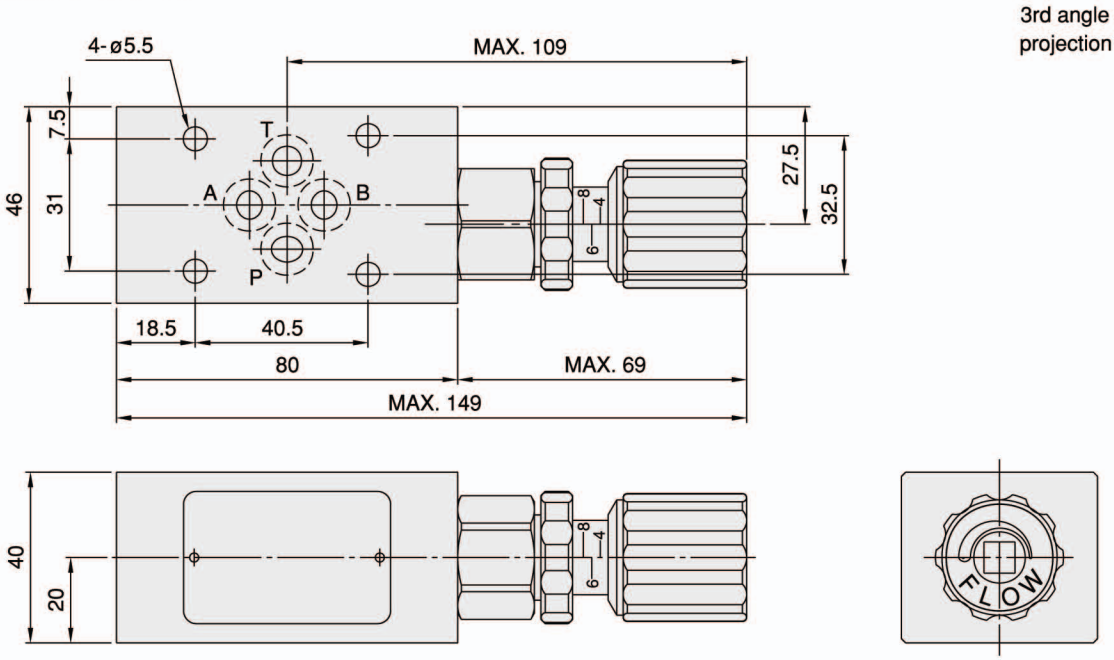

DGMTC-03-P-20

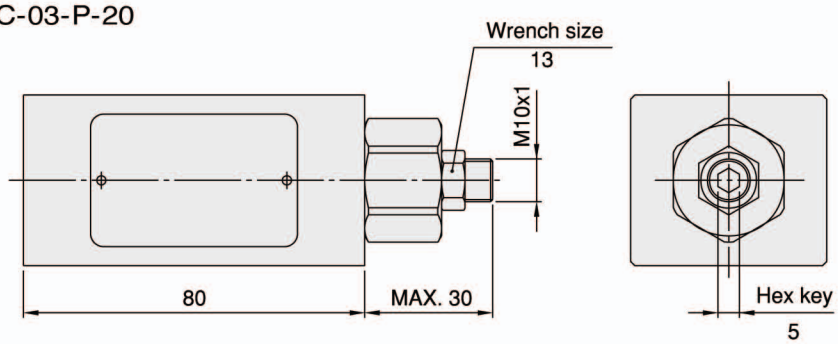

Cross Section Drawing :

DGMTC-03-P-10

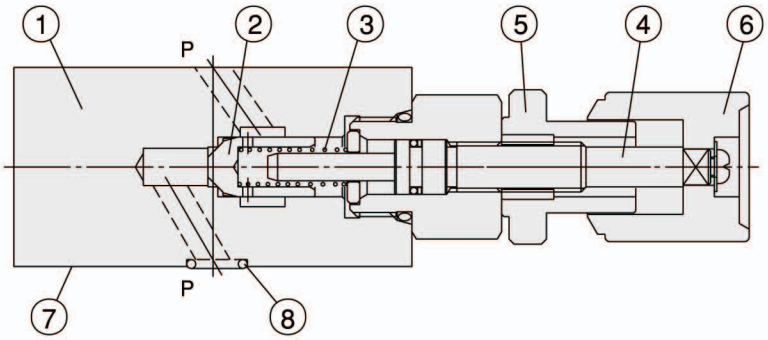

1. Body.
2. Throttle.
3. Spring.
4. Setting screw.
5. Locking nut.
6. Adjustment element.
7. Connections to DIN 24340 from A6; valve fixing screws M5 DIN 912-10.9, tightening torque 8~9 Nm.
8. O-ring 1B-P9 for ports A,B,P and T.

Characteristics :

EDGMTC03 Size 6

- Highest performance in NG 6.
- Sandwich plate design.
- For limiting the main or pilot fluid flow of 2 actuator connections
- For meter-in or meter-out control
- Connections to DIN, ISO and CETOP.

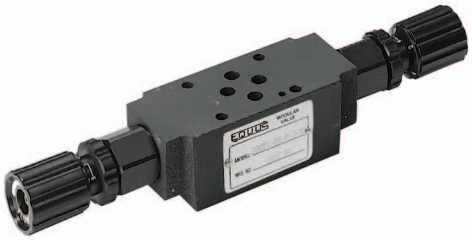

Model: DGMTC-03-W-O-10

Specification :

Maximum flow	50 ℓ /min {13.2 GPM}
Maximum operating pressure	320 bar {4570 PSI}
Check valve cracking pressure	0.8 bar {11.4 PSI}
Ambient temperature range	-20˚C~+50˚C
Hydraulic fluid temperature	-20˚C~+70˚C
Viscosity range	15~400 mm²/s

Hydraulic oil		ISO VG 32,46,68
Fluid cleanliness		NAS Class 9 MAX.
Mounting pattern		ISO 4401-AB-03-4-A
Weight	W type	1.3 kg
	A type	1.2 kg
	B type	1.2 kg

Hydraulic Configuration :

DGMTC-03-W-O-10

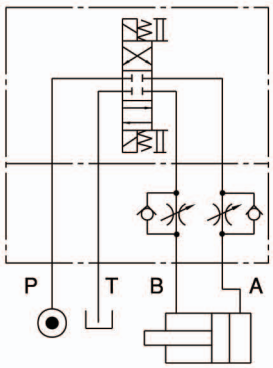

DGMTC-03-A-O-10

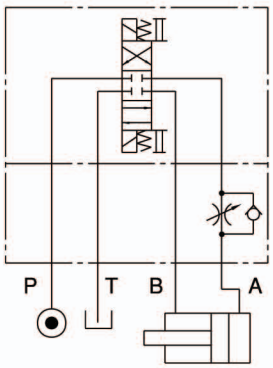

DGMTC-03-B-O-10

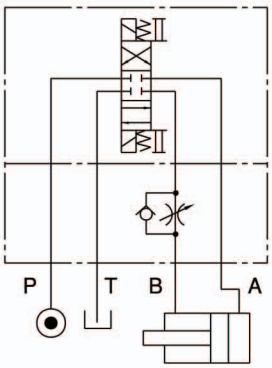

DGMTC-03-W-I-10

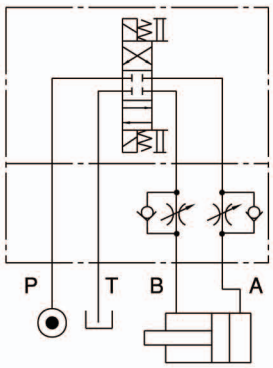

DGMTC-03-A-I-10

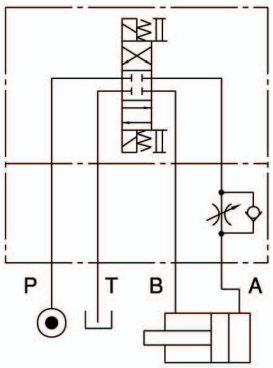

DGMTC-03-B-I-10

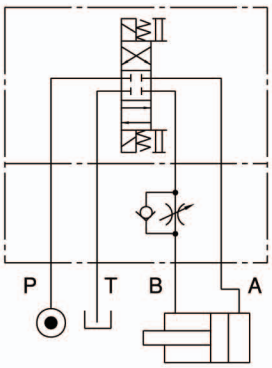

Ordering Code : EDGMTC03 Size 6

DGM	TC	-	03	-	W	-	O	-	10	-	**
1	2		3		4		5		6		7

1 Sandwich Plate Design

2 Flow Regulator with Check Valve

3 Nominal Valve Size

- Nominal valve size: NG 6,CETOP 3 and ISO 4401-03.

4 Configuration

- W: double; acting on ports A and B.
- A: single; acting on port A.
- B: single; acting on port B.

5 Control Way

- O: Meter out, control of flow discharged from the actuator.
- I : Meter in, control of flow entering the actuator.

6 Design Number

- 10: with handle.
- 20: without handle.

7 Optional Inquiry

Performance Curves :

Viscosity of Hydraulic Fluid: 32 mm²/s

Pressure Drop Characteristic

DGMTC-03-W-O-10
(DGMTC-03-W-I-10)

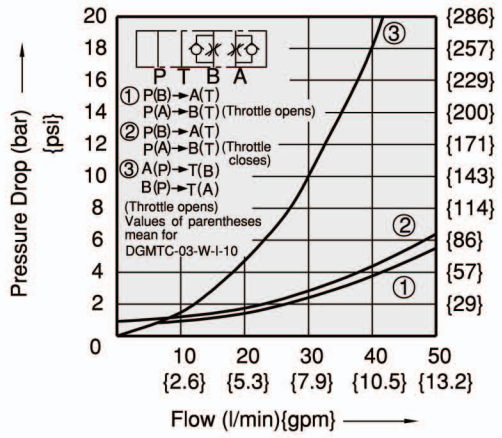

Stroke Versus Flow Diagram

DGMTC-03-W-O(I)-10
DGMTC-03-A-O(I)-10
DGMTC-03-B-O(I)-10

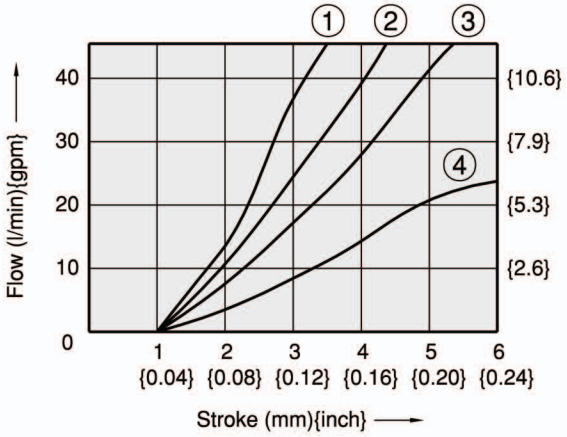

① Pressure Difference=140 bar {2000psi}
② Pressure Difference=70 bar {1000psi}
③ Pressure Difference=35 bar {500psi}
④ Pressure Difference=10 bar {143psi}

Dimensions : EDGMTC03 Size 6

DGMTC-03-W-O-10

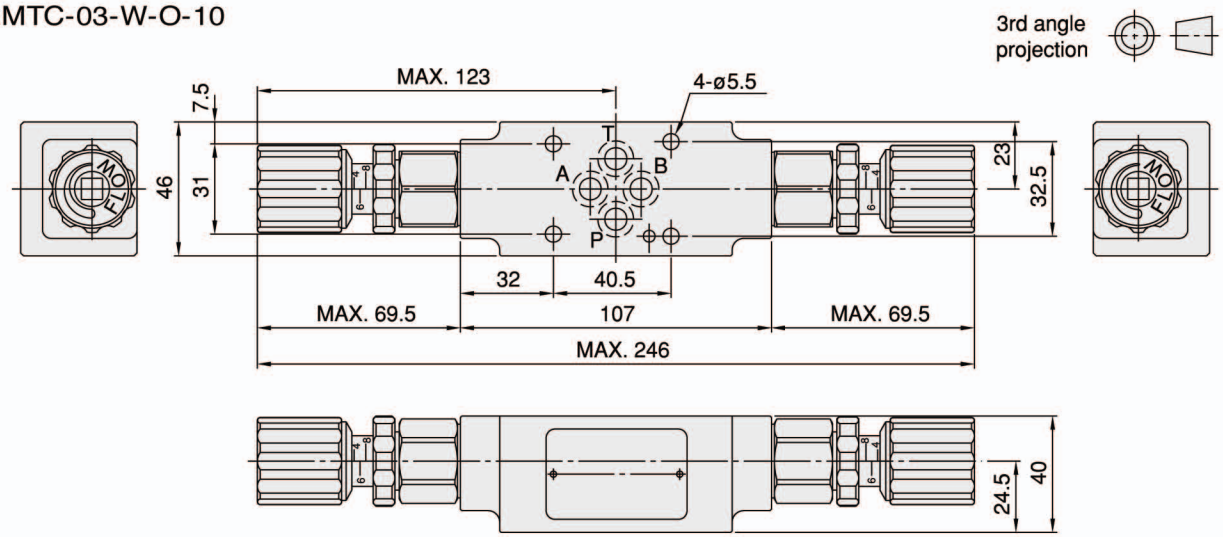

DGMTC-03-A-O-10

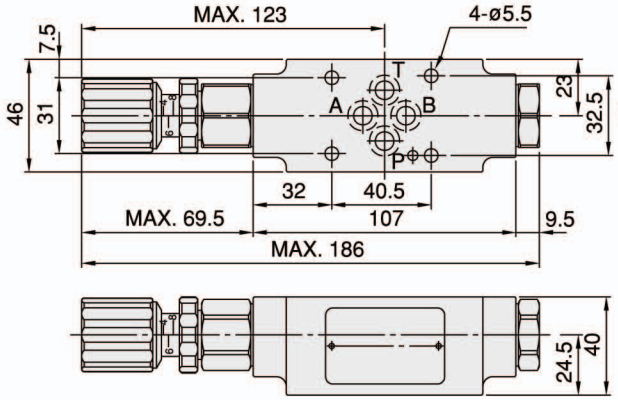

DGMTC-03-B-O-10

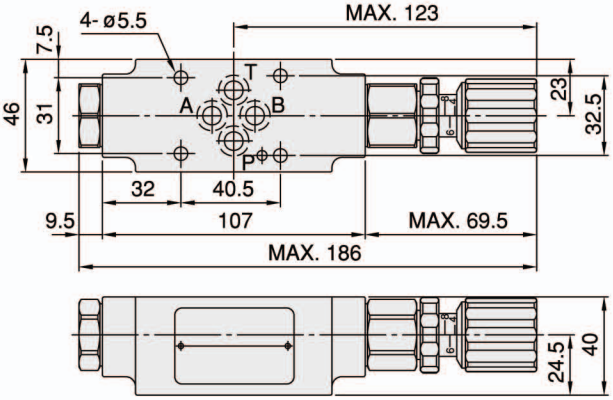

DGMTC-03- ∗ -O-20

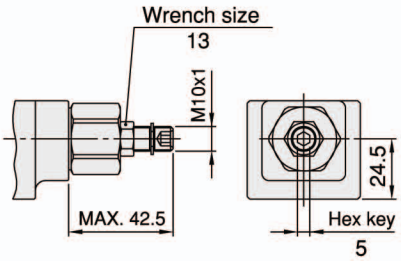

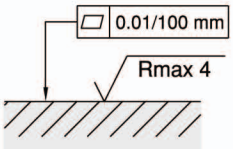

Required surface finish of mating piece

Cross Section Drawing :

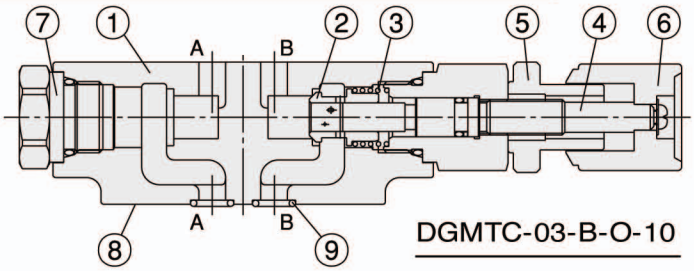

DGMTC-03-B-O-10

1. Body.
2. Throttle.
3. Spring.
4. Setting screw.
5. Locking nut.
6. Adjustment element.
7. Nut.
8. Connections to DIN 24340 from A6; valve fixing screws M5 DIN 912-10.9, tightening torque 8~9 Nm.
9. O-ring 1B-P9 for ports A,B,P and T.

Dimensions : EDGMTC03 Size 6

DGMTC-03-W-I-10

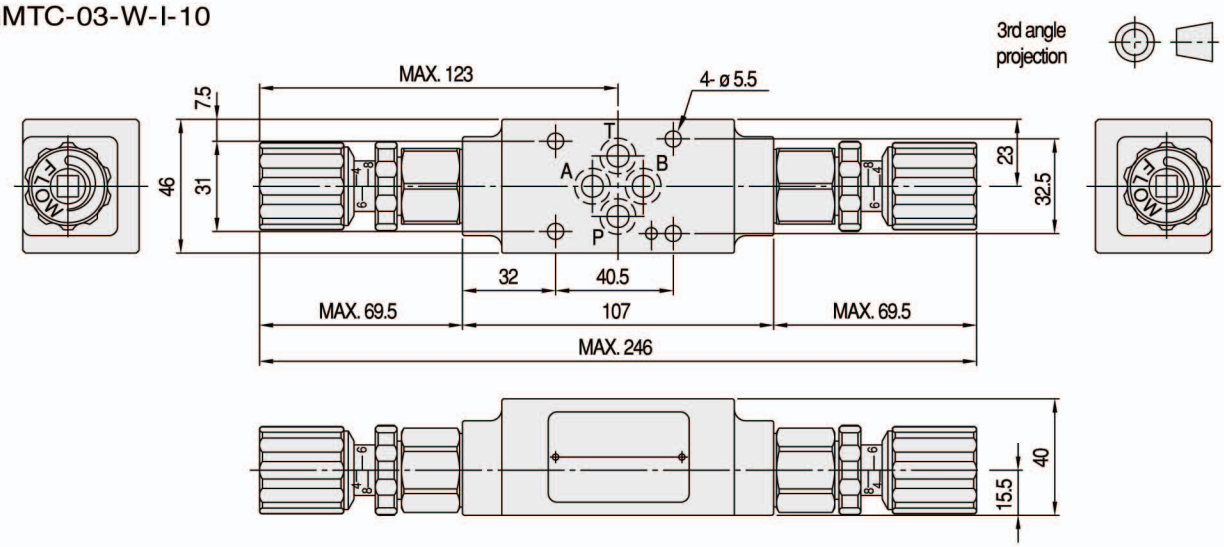

DGMTC-03-A-I-10

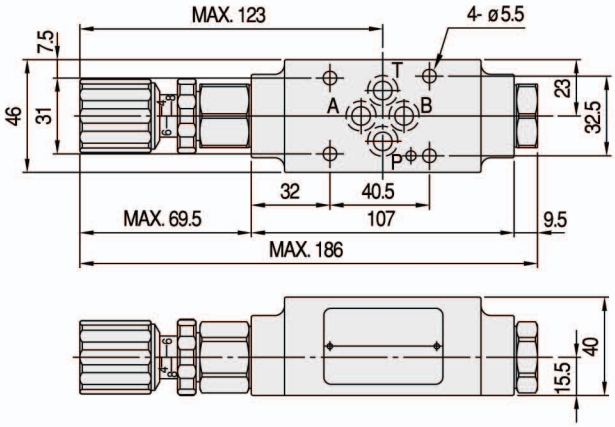

DGMTC-03-B-I-10

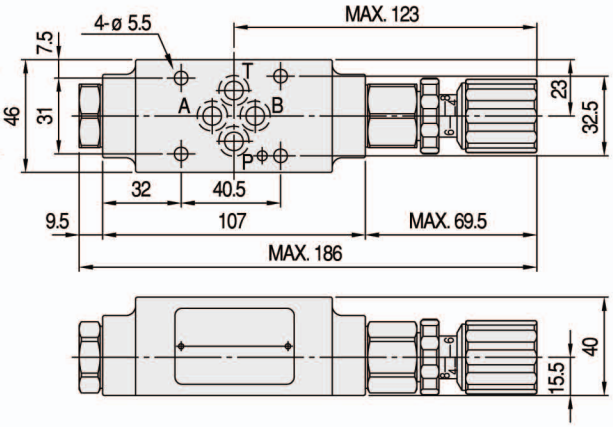

DGMTC-03- ∗-I-20

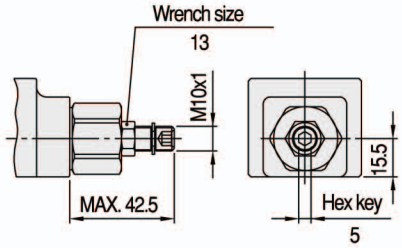

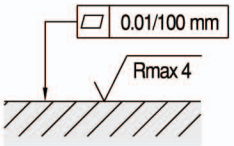

Required surface finish of mating piece

Cross Section Drawing :

DGMTC-03-B-I-10

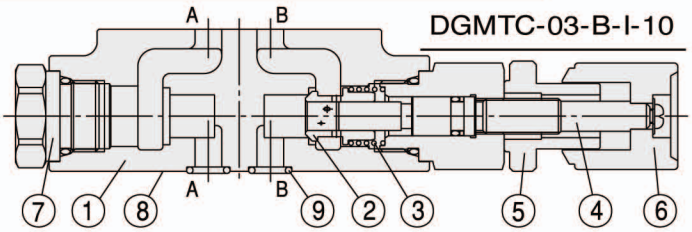

1. Body.
2. Throttle.
3. Spring.
4. Setting screw.
5. Locking nut.
6. Adjustment element.
7. Nut.
8. Connections to DIN 24340 from A6; valve fixing screws M5 DIN 912-10.9, tightening torque 8~9 Nm.
9. O-ring 1B-P9 for ports A,B,P and T.

List of Modular Valve Series : 03 Size 6

Classification	Valve Name	Valve Model	Pressure Adjusting Range (bar)	Max. Flow (L/min)	Hydraulic Symbol	Weight (Kg)	Refer Page
Directional Control Valve	Solenoid Valve	DG03- ∗ - ∗ -70	320	80	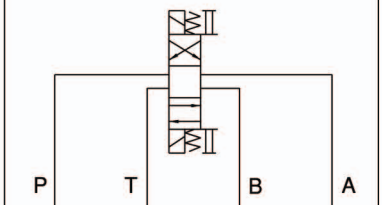		J 1-10
Pressure Control Valve	Relief Valve (Balance Type)	DGMRV-03-P- ∗-10	0: 7~35	50	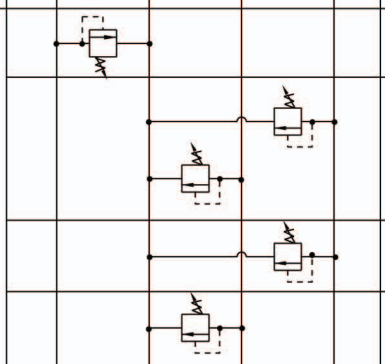	1.5	5
		DGMRV-03-W- ∗-10	1: 7~70 2: 7~140			2.3	
		DGMRV-03-A- ∗-10	3: 7~210			1.6	
		DGMRV-03-B- ∗-10	4: 35~320			1.6	
	Brake Valve (Direct type)	DGMBV-03-W- ∗-10	1: 8~70	20		1.5	8
		DGMBV-03-A- ∗-10	3: 35~210			1.4	
		DGMBV-03-B- ∗-10				1.4	
	Reducing Valve (Direct type)	DGMGV-03-P- ∗-10	0: 1.5~35	40		1.3	11
		DGMGV-03-A- ∗-10	1: 7~70 2: 7~140			1.3	
		DGMGV-03-B- ∗-10	3: 7~210			1.3	
	Counter Balance Valve	DGMCB-03-A1- ∗-10	1: 8~70	40		1.1	14
		DGMCB-03-B1- ∗-10	2: 35~140			1.1	
	Sequence Valve	DGMSV-03-P2- ∗-10	1: 8~70 3: 35~210	40		1.1	17

Characteristics :

EDGMCV03 Size 6

- Highest performance in NG 6.
- Sandwich plate design.
- Direct operated check valve.
- 5 different isolating functions.
- Connections to DIN, ISO and CETOP.

Model: DGMCV-03-P-1-10

Specification :

Maximum flow	50 ℓ/min {13.2 GPM}
Maximum operating pressure	320 bar {4570 PSI}
Spring cracking pressure	1: 0.4 bar {5.7 PSI}
	2: 3.5 bar {50 PSI}
	3: 5.0 bar {71 PSI}
Ambient temperature range	-20˚C~+50˚C
Hydraulic fluid temperature	-20˚C~+70˚C
Viscosity range	15~400 mm²/s

Hydraulic oil		ISO VG 32,46,68
Fluid cleanliness		NAS Class 9 MAX.
Mounting pattern		ISO 4401-AB-03-4-A
Weight	P type	0.97 Kg
	T type	0.97 Kg
	A type	1.2 Kg
	B type	1.2 Kg
	W type	1.4 Kg

Hydraulic Configuration :

DGMCV-03-P- ∗-10

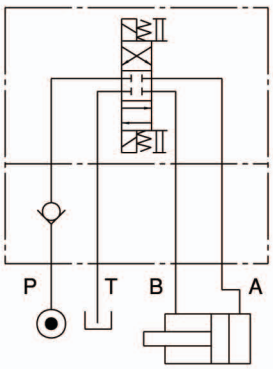

DGMCV-03-T- ∗-10

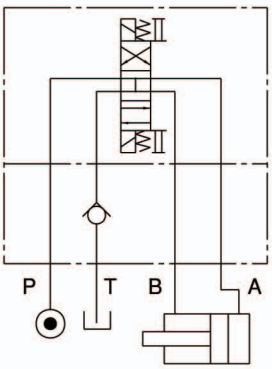

DGMCV-03-A- ∗-10

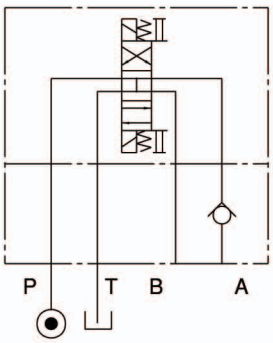

DGMCV-03-B- ∗-10

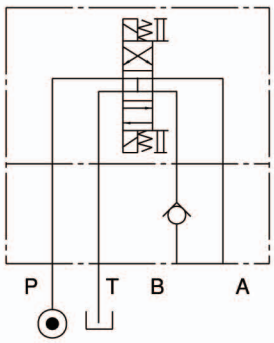

DGMCV-03-W- ∗-10

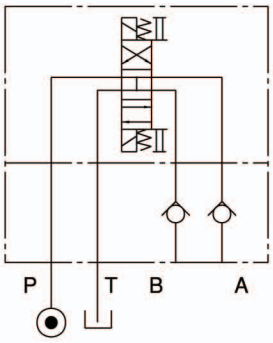

Ordering Code : EDGMCV03 Size 6

DGM	CV	-	03	-	P	-	1	-	10	-	＊＊
1	2		3		4		5		6		7

1 Sandwich Plate Design

2 Check Valve

3 Nominal Valve Size

- Nominal valve size: NG 6,CETOP 3 and ISO 4401-03.

4 Configuration

- P : single; acting on port P.
- T : single; acting on port T.
- W: single; acting on port A and B.
- A: single; acting on port A.
- B: single; acting on port B.

5 Spring Cracking Pressure

- 1: 0.4 bar.
- 2: 3.5 bar.
- 3: 5.0 bar.

6 Design Number

7 Optional Inquiry

Performance Curves :

Viscosity of Hydraulic Fluid: 32 mm²/s

Pressure Drop Characteristic

DGMCV-03-P- ＊-10

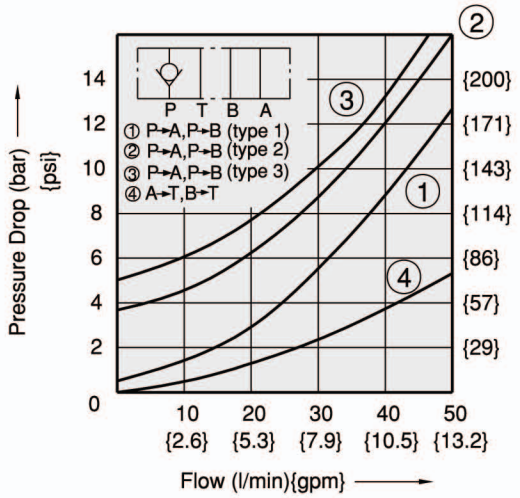

Installation Dimensions :

(Machined valve mounting face with poisition of ports)

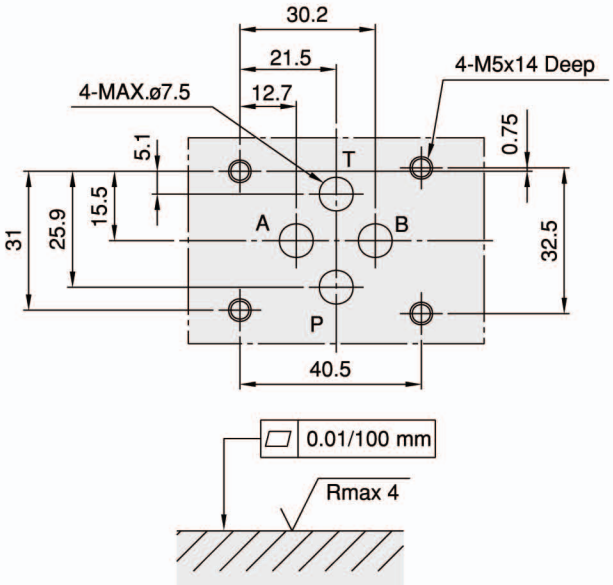

Required surface finish of mating piece

Dimensions : EDGMCV03 Size 6

DGMCV-03-P- ∗-10

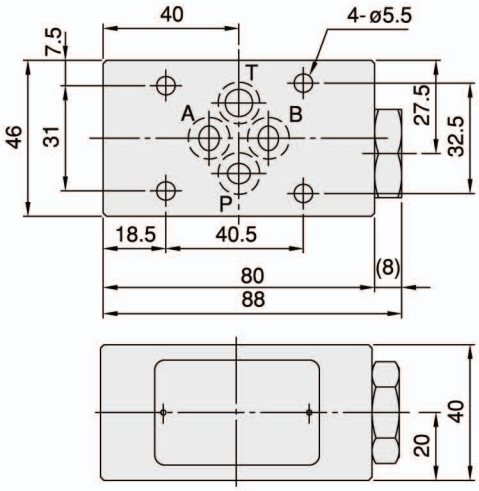

DGMCV-03-T- ∗-10

3rd angle projection

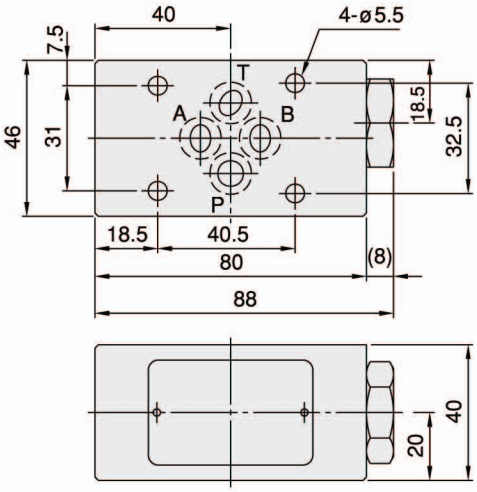

DGMCV-03-A- ∗-10
DGMCV-03-B- ∗-10
DGMCV-03-W- ∗-10

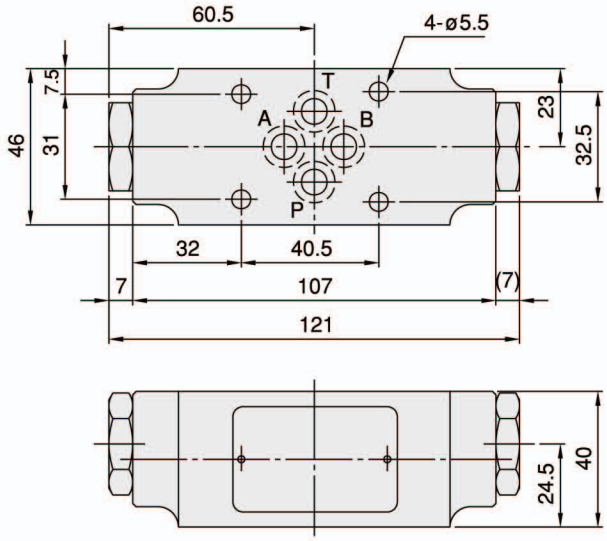

Cross Section Drawing :

DGMCV-03-P- ∗-10

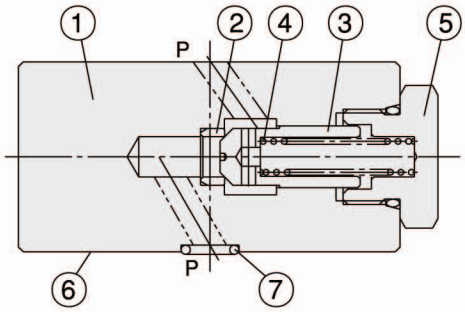

1. Body.
2. Seat.
3. Poppet.
4. Spring.
5. Nut.
6. Connections to DIN. 24340 from A6; valve fixing screws M5 DIN 912-10.9, tightening torque 8~9 Nm.
7. O-ring 1B-P9 for ports A, B, P and T.

Characteristics :

EDGMAC03 Size 6

- Highest performance in NG 6.
- Sandwich plate design.
- Direct operated check valve.
- Be incorporated between A, B port and T port.
- This check valve of a certain type can be used for suction.
- Connections to DIN, ISO and CETOP.

Model: DGMAC-03-W-10

Specification :

Maximum flow	50 ℓ /min {13.2 GPM}
Maximum opearting pressure	320 bar {4570 PSI}
Spring cracking pressure	0.15 bar {2.14 PSI}
Ambient temperature range	-20°C~+50°C
Hydraulic fluid temperature	-20°C~+70°C

Viscosity range	15~400 mm²/s
Hydraulic oil	ISO VG 32, 46, 68
Fluid cleanliness	NAS Class 9 MAX.
Mounting pattern	ISO 4401-AB-03-4-A
Weight	1.0 kg

Hydraulic Configuration :

DGMAC-03-W-10

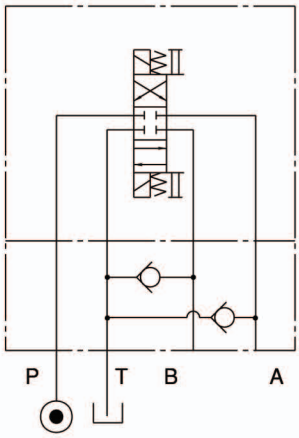

Installation Dimensions :

(Machined valve mounting face with poisition of ports)

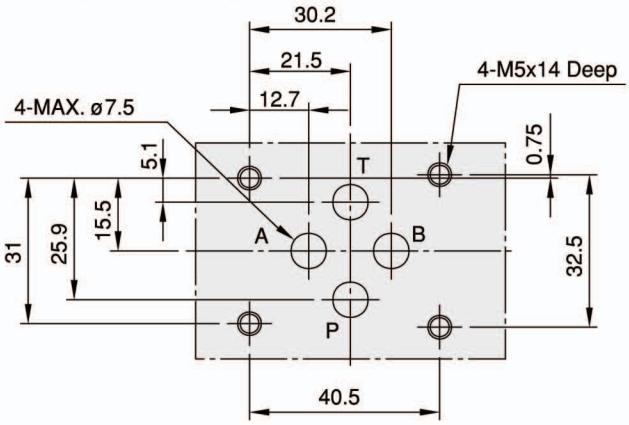

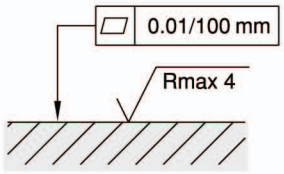

Required surface finish of mating piece

Ordering Code : EDGMAC03 Size 6

DGM AC - 03 - W - 10 - **

1 2 3 4 5 6

1	**Sandwich Plate Design**
2	**Vacuum Check Valve**
3	**Nominal Valve Size**
• Nominal valve size: NG 6, CETOP 3 and ISO 4401-03.	
4	**Configuration**
• W: double; be incorporated between A, B port and T port.	
5	**Design Number**
6	**Optional Inquiry**

Performance Curves :

Viscosity of Hydraulic Fluid: 32 mm²/s

Pressure Drop Characteristic

DGMAC-03-W-10

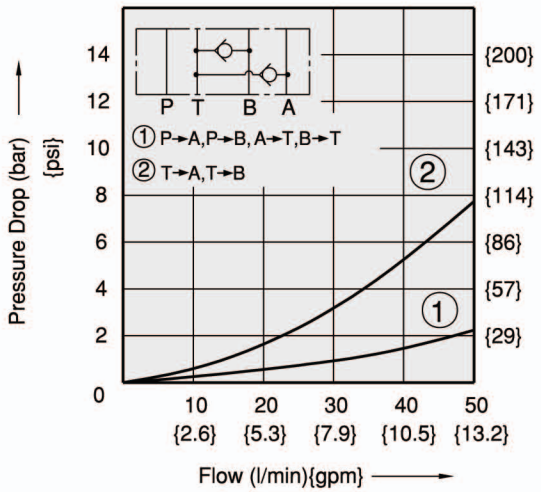

Dimensions : EDGMAC03 Size 6

DGMAC-03-W-10

3rd angle projection

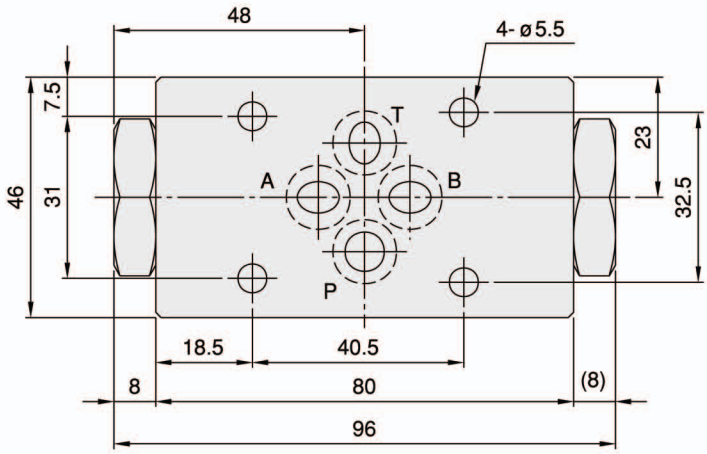

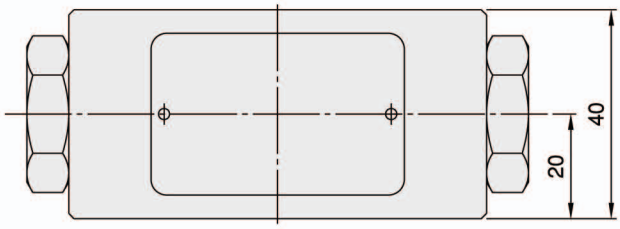

Cross Section Drawing :

DGMAC-03-W-10

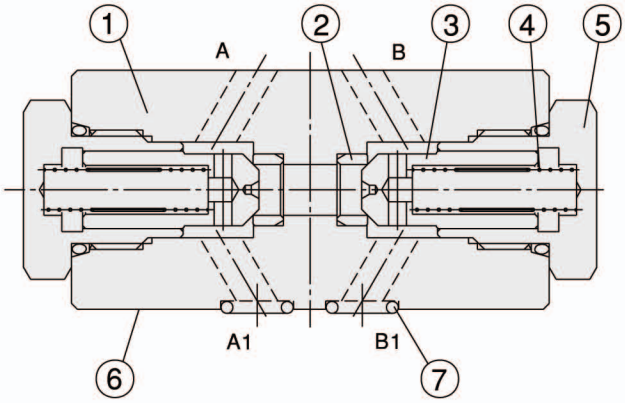

1. Body.
2. Seat.
3. Poppet.
4. Spring.
5. Nut.
6. Connections to DIN 24340 from A6; valve fixing screws M5 DIN 912-10.9, tightening torque 8~9 Nm.
7. O-ring 1B-P9 for ports A, B, P and T.

Characteristics :

EDGMPC03 Size 6

- Highest performance in NG 6.
- Sandwich plate design.
- Pilot operated check valve.
- For leak free sealing of one or two actuator port.
- Connections to DIN, ISO and CETOP.

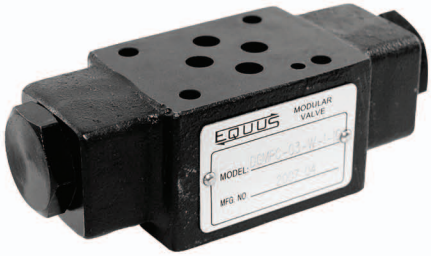

Model: DGMPC-03-W-1-10

Specification :

Maximum flow		50 ℓ/mm {13.2 GPM}
Maximum operating pressure		320 bar {4570 PSI}
Spring cracking pressure		1: 2 bar {29 PSI}
		2: 5 bar {71 PSI}
Area ratio	Pilot piston	1
	Check valve seat	0.37
	Needle valve seat	-
Ambient temperature range		-20˚C~+50˚C

Hydraulic fluid temperature		-20˚C~+70˚C
Viscosity range		15~400 mm²/s
Hydraulic oil		ISO VG 32,46,68
Fluid cleanliness		NAS Class 9 MAX.
Mounting pattern		ISO 4401-AB-03-4-A
Weight	W type	1.2 kg
	A type	1.2 kg
	B type	1.2 kg

Hydraulic Configuration :

DGMPC-03-W- ∗-10

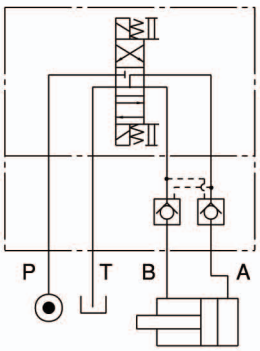

DGMPC-03-A- ∗-10

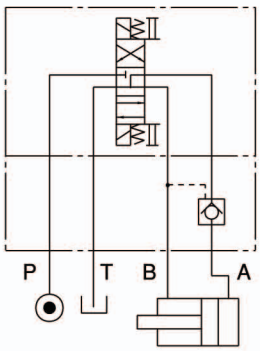

DGMPC-03-B- ∗-10

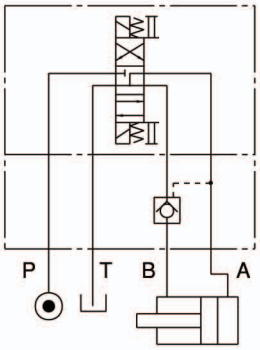

Installation Dimensions :

(Machined valve mounting face with poisition of ports)

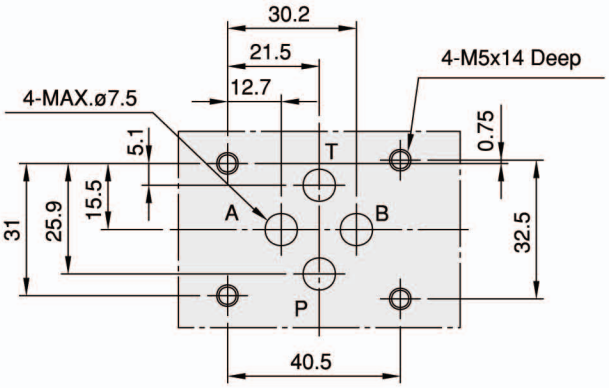

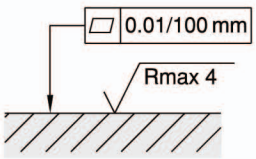

Required surface finish of mating piece

Ordering Code : EDGMPC03 Size 6

DGM	PC	-	03	-	W	-	1	-	10	-	＊＊
1	2		3		4		5		6		7

1 Sandwich Plate Design

2 Pilot Operated Check Valve

3 Nominal Valve Size

- Nominal valve size: NG 6, CETOP 3 and ISO 4401-03.

4 Configuration

- W: double; acting on ports A and B.
- A: single; acting on port A.
- B: single; acting on port B.

5 Spring Cracking Pressure

- 1: 2 bar.
- 2: 5 bar.

6 Design Number

7 Optional Inquiry

Performance Curves :

Viscosity of Hydraulic Fluid: 32 mm²/s

Pressure Drop Characteristic

DGMPC-03-W- ＊-10

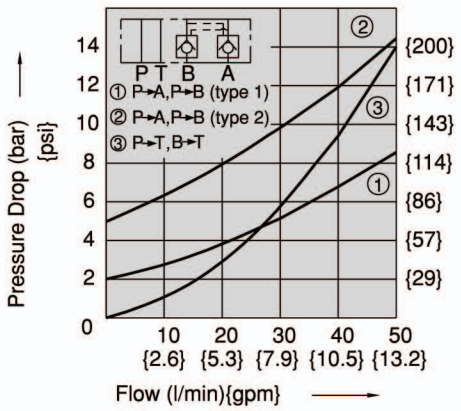

Min. Pilot Pressure Characteristic

DGMPC-03-W- ＊-10

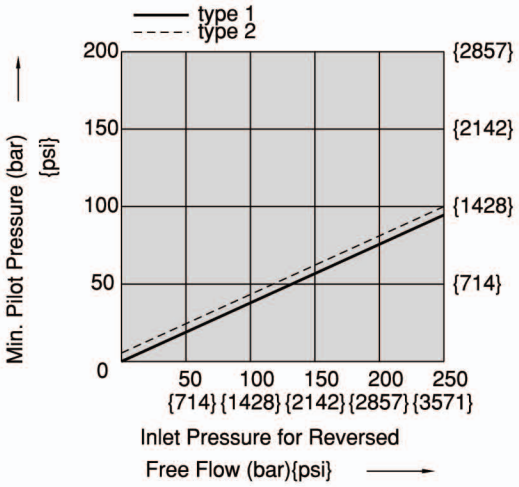

Dimensions : EDGMPC03 Size6

DGMPC-03-W- ∗-10
DGMPC-03-A- ∗-10
DGMPC-03-B- ∗-10

3rd angle projection

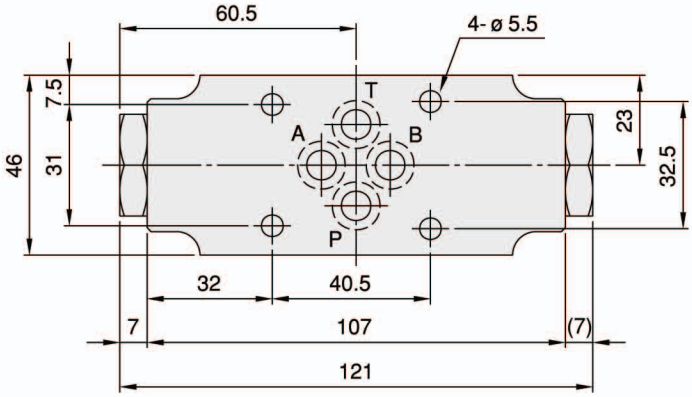

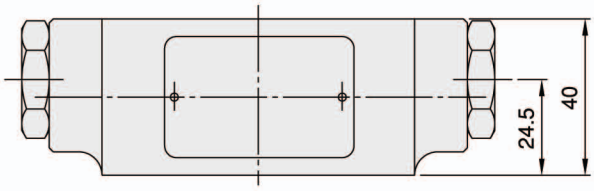

Cross Section Drawing :

DGMPC-03-A- ∗-10

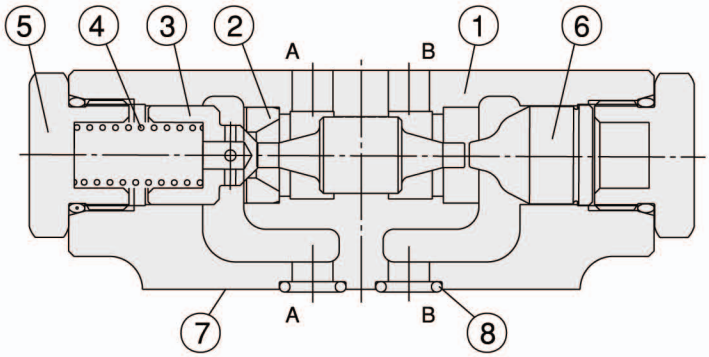

1. Body.
2. Seat.
3. Poppet.
4. Spring.
5. Nut.
6. Bushing.
7. Connections to DIN 24340 from A6; valve fixing screws M5 DIN 912-10.9, tightening torque 8~9 Nm.
8. O-ring 1B-P9 for ports A,B,P and T.

Characteristics :

EDGMPD03 Size 6

- Highest performance in NG 6.
- Sandwich plate design.
- Pilot operated check valve with decompression.
- For leak free sealing of one or two actuator port.
- Connections to DIN, ISO and CETOP.

Model: DGMPD-03-W-1-10

Specification :

Maximum flow		50ℓ /mm {13.2 GPM}
Maximum operating pressure		320 bar {4570 PSI}
Spring cracking pressure		1: 2 bar {29 PSI}
		2: 5 bar {71 PSI}
Area ratio	Pilot piston	1
	Check valve seat	0.51
	Needle valve seat	0.06
Ambient temperature range		-20˚C~+50˚C

Hydraulic fluid temperature		-20˚C~+70˚C
Viscosity range		15~400 mm²/s
Hydraulic oil		ISO VG 32,46,68
Fluid cleanliness		NAS Class 9 MAX.
Mounting pattern		ISO 4401-AB-03-4-A
Weight	W type	1.2 kg
	A type	1.2 kg
	B type	1.2 kg

Hydraulic Configuration :

DGMPD-03-W- ∗-10

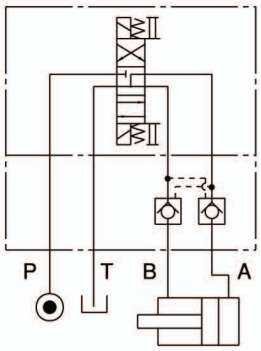

DGMPD-03-A- ∗-10

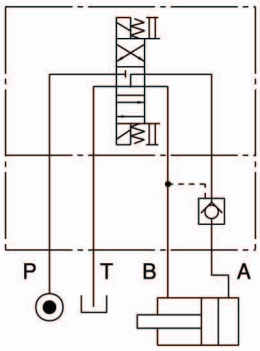

DGMPD-03-B- ∗-10

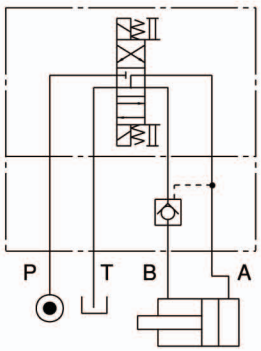

Installation Dimensions :

(Machined valve mounting face with poisition of ports)

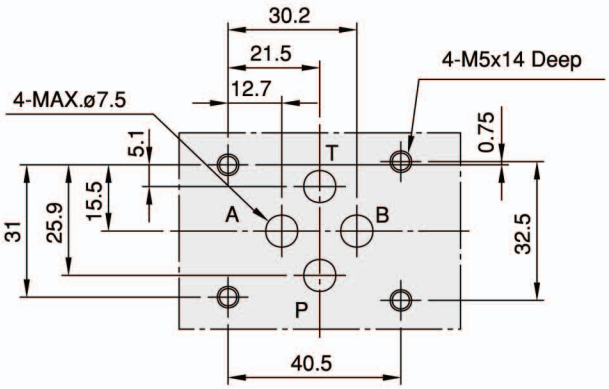

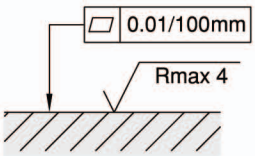

Required surface finish of mating piece

List of Modular Valve Series : 03 Size 6

Classification	Valve Name	Valve Model	Pressure Adjusting Range (bar)	Max. Flow (L/min)	Hydraulic Symbol	Weight (Kg)	Refer Page
Flow Control Valve	Flow Regulator Valve	DGMTV-03-P-10		50		0.99	20
		DGMTV-03-T-10				0.99	
	Flow Regulator with Check Valve	DGMTC-03-P-10	Cracking Pressure: 0.4	50		1.0	23
	Flow Regulator with Metered Out Check	DGMTC-03-W-O-10	Cracking Pressure: 0.8	50		1.3	26
		DGMTC-03-A-O-10				1.2	
		DGMTC-03-B-O-10				1.2	
	Flow Regulator with Metered In Check	DGMTC-03-W-I-10	Cracking Pressure: 0.8	50		1.3	26
		DGMTC-03-A-I-10				1.2	
		DGMTC-03-B-I-10				1.2	
Directional Control Valve	Check Valve	DGMCV-03-P- ∗-10	Cracking Pressure: 1: 0.4 2: 3.5 3: 5.0	50		0.97	30
		DGMCV-03-T- ∗-10				0.97	
		DGMCV-03-A- ∗-10				1.2	
		DGMCV-03-B- ∗-10				1.2	
	Vacuum Check Valve	DGMAC-03-W-10	Cracking Pressure: 0.15	50		1.0	33
	Pilot Check Valve	DGMPC-03-W- ∗-10	Cracking Pressure: 1: 2 2: 5	50		1.2	36
		DGMPC-03-A- ∗-10				1.2	
		DGMPC-03-B- ∗-10				1.2	
	Pilot Check Valve (With decompression)	DGMPD-03-W- ∗-10	Cracking Pressure: 1: 2 2: 5	50		1.2	39
		DGMPD-03-A- ∗-10				1.2	
		DGMPD-03-B- ∗-10				1.2	
Modular Block	Manifold Block	DGMFB-03- ∗-10		50			42

Ordering Code : EDGMPD03 Size 6

DGM	PD	-	03	-	W	-	1	-	10	-	**
1	2		3		4		5		6		7

1 Sandwich Plate Design

2 Pilot Operated Check Valve with Decompression

3 Nominal Valve Size

- Nominal valve size: NG 6, CETOP 3 and ISO 4401-03.

4 Configuration

- W: double; acting on ports A and B.
- A: single; acting on port A.
- B: single; acting on port B.

5 Spring Cracking Pressure

- 1: 2 bar.
- 2: 5 bar.

6 Design Number

7 Optional Inquiry

Performance Curves :

Viscosity of Hydraulic Fluid: 32 mm²/s

Pressure Drop Characteristic

DGMPD-03-W- *-10

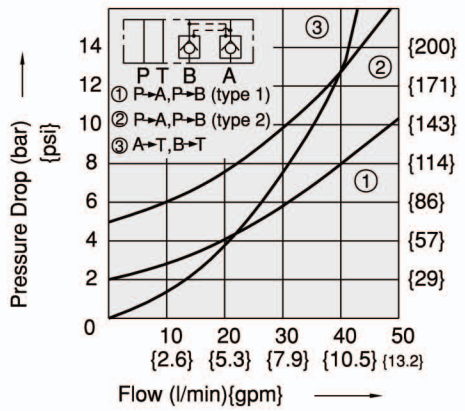

Min. Pilot Pressure Characteristic

DGMPD-03-W- *-10

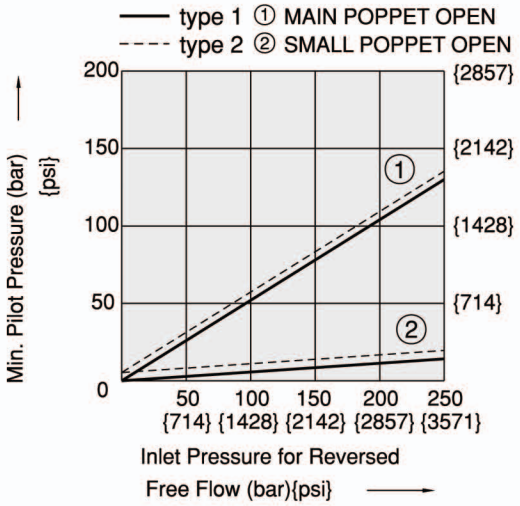

Dimensions : EDGMPD03 Size 6

DGMPD-03-W- ∗-10
DGMPD-03-A- ∗-10
DGMPD-03-B- ∗-10

3rd angle projection

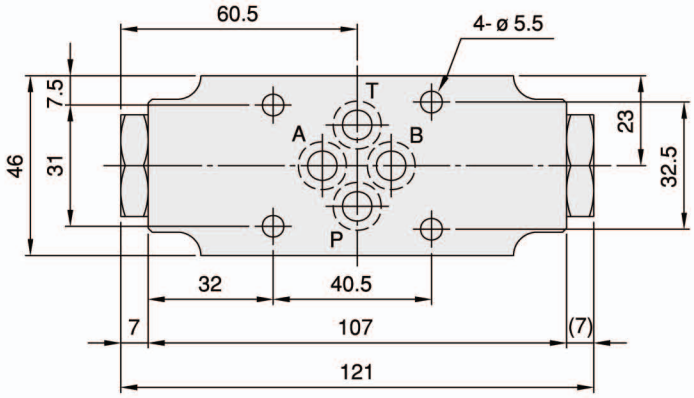

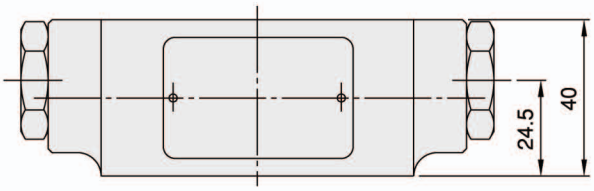

Cross Section Drawing :

DGMPD-03-A- ∗-10

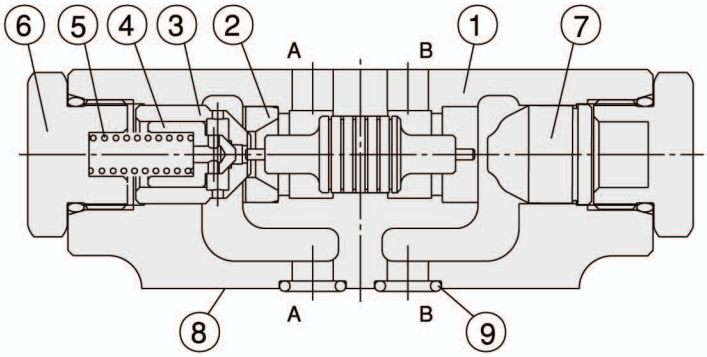

1. Body.
2. Seat.
3. Poppet 1.
4. Poppet 2.
5. Spring.
6. Nut.
7. Bushing.
8. Connections to DIN 24340 from A6; valve fixing screws M5 DIN 912-10.9, tightening torque 8~9 Nm.
9. O-ring 1B-P9 for ports A,B,P and T.

EDGMFB03 Size 6

Model: DGMFB-03-1-10

Hydraulic Configuration :

DGMFB-03-1-10

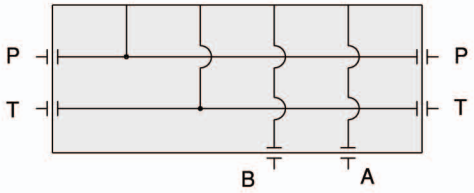

DGMFB-03- *-10

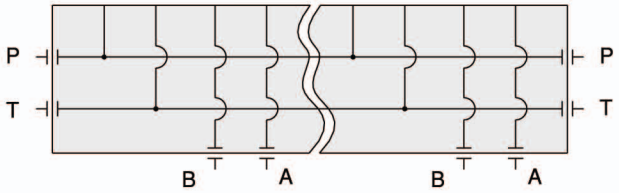

Specification :

Maximum flow	50 ℓ /min {13.2 GPM}
Maximum operating pressure	320 bar {4570 PSI}
Ambient temperature range	-20˚C~+50˚C
Hydraulic fluid temperature	-20˚C~+70˚C
Hydraulic oil	ISO VG 32, 46, 68
Mounting pattern	ISO 4401-AB-03-4-A

Ordering Code :

DGM FB - 03 - 1 - 10 - * *

1 2 3 4 5 6

1 **Sandwich Plate Design**

2 **Manifold Block**

3 **Nominal Valve Size**

- Nominal valve size: NG 6, CETOP 3 and ISO 4401-03.

4 **Number of Controls in Vertical Stacking Design**

- 2: for 2 controls.
- 3: for 3 controls.
- 4: for 4 controls.
- 5: for 5 controls.
- 6: for 6 controls.
- 7: for 7 controls.

5 **Design Number**

6 **Optional Inquiry**

Dimensions : EDGMFB03 Size 6

DGMFB-03-1-10

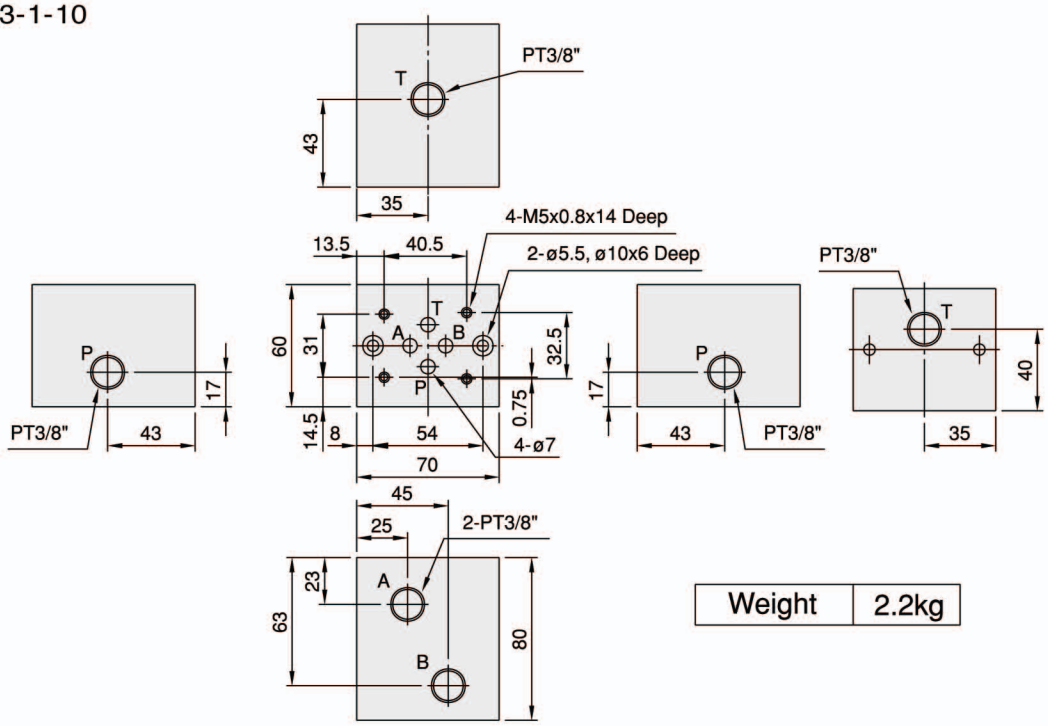

Weight	2.2kg

DGMFB-03- ∗ -10

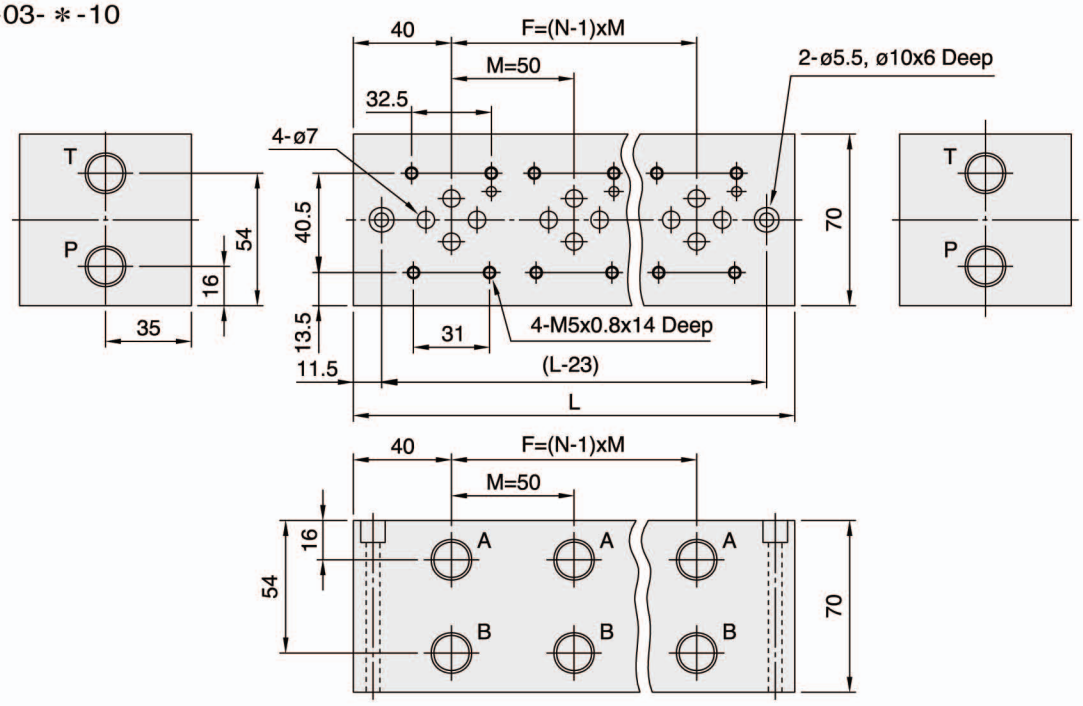

Types	N	F	L	A	B	P	T	Weight (kg)
DGMFB-03-2-10	2	50	130	Rc3/8"				4.5
DGMFB-03-3-10	3	100	180					6.3
DGMFB-03-4-10	4	150	230					8.1

Types	N	F	L	A	B	P	T	Weight (kg)
DGMFB-03-5-10	5	200	280	Rc3/8"				9.8
DGMFB-03-6-10	6	250	330					11.6
DGMFB-03-7-10	7	300	380					13.4

Hexagon Socket Head Bolt: 03 Size 6

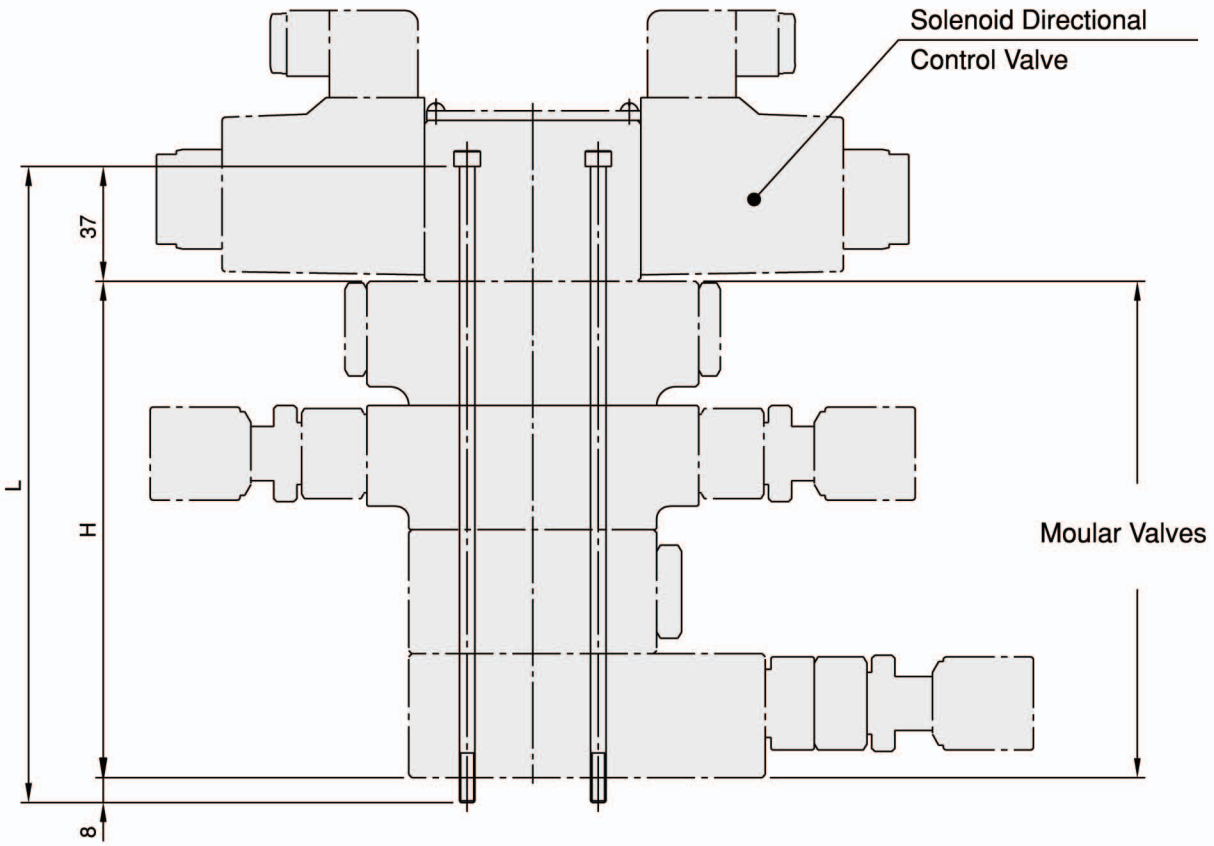

Numbers of the moular valves	H	L	Bolt length	
			Metric	Inch
1	40	85	M5x85Lx4 pcs.	10#~24UNCx3-3/8" Lx4 pcs.
2	80	125	M5x125Lx4 pcs.	10#~24UNCx5" Lx4 pcs.
3	120	165	M5x165Lx4 pcs.	10#~24UNCx6-1/2" Lx4 pcs.
4	160	205	M5x205Lx4 pcs.	10#~24UNCx8-1/8" Lx4 pcs.

Characteristics :

05 **Size 10**

- Highest performance in NG 10.
- Compacting stacking valves.
- Eliminating intervalve piping and fittings.
- Reducing leakage and installation costs.
- Max. Operating Pressure: 32 MPa.
- Max. Flow: 100 ℓ /min.
- Connections to DIN, ISO and CETOP.

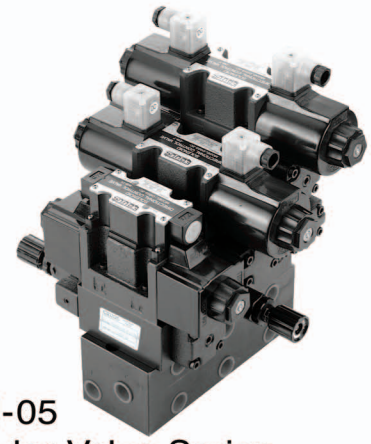

DGM-05
Modular Valve Series

Stacking Example:

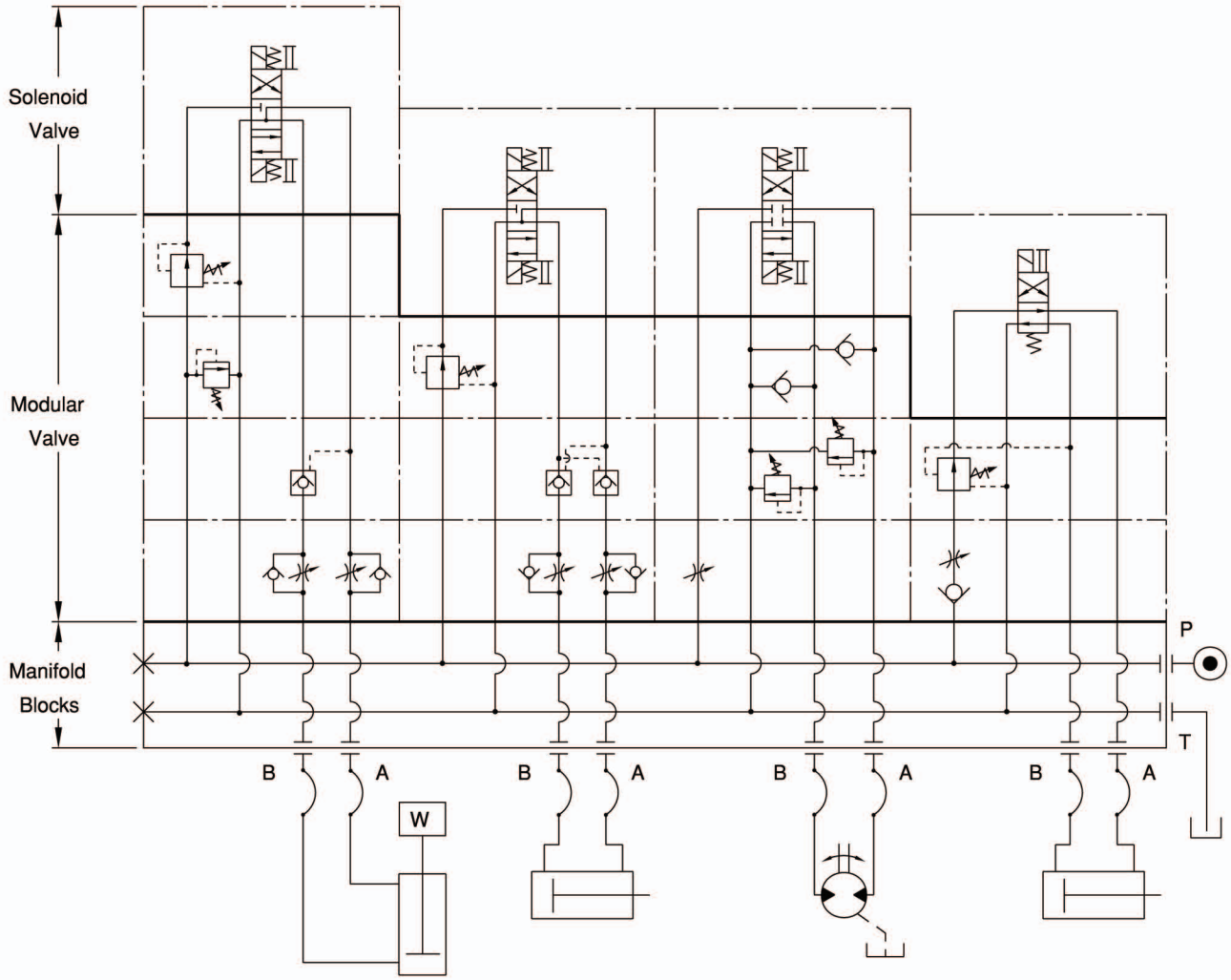

Care in Application :

05 Size 10

Valve Name	Wrong Example	Correct Example	Instructions
Solenoid operated directional control valve Pilot operated check valve (DGMPC-05-W-∗-10) Pressure reducing valve (DGMGV-05-B-∗-10)	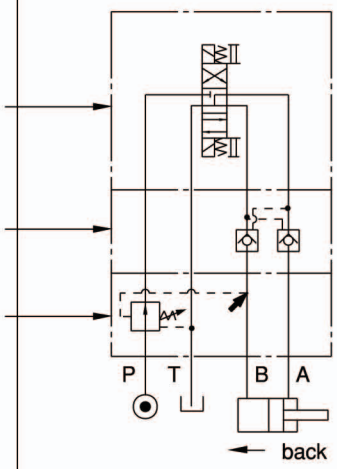	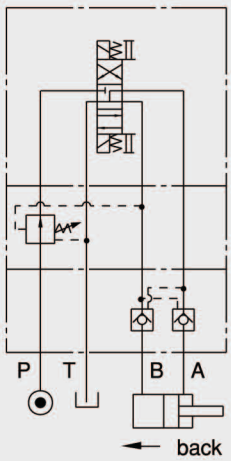	When DGMGV-05-B and DGMPC-05-W are used together in the same circuit, the right circuit is correct, and the left is wrong, as DGMPC-05-W would not be totally closed.
Solenoid operated directional control valve Flow regulator with metered out check (DGMTC-05-W-O-10) Pilot operated check valve (DGMPC-05-W-∗-10)	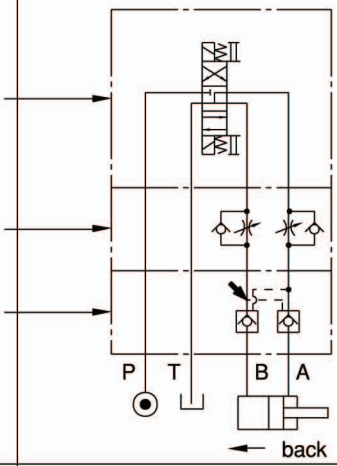	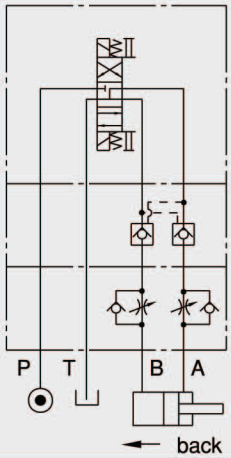	When DGMTC-05-W-O and DGMPC-05-W are used together in the same circuit , DGMTC-05-W-O should be installed closer to the cylinder ports, otherwise the cylinder may have a "knocking" phenomenon happened.
Solenoid operated directional control valve Flow regulator with metered out check (DGMTC-05-W-O-10) Pressure reducing valve (DGMGV-05-B-∗-10)	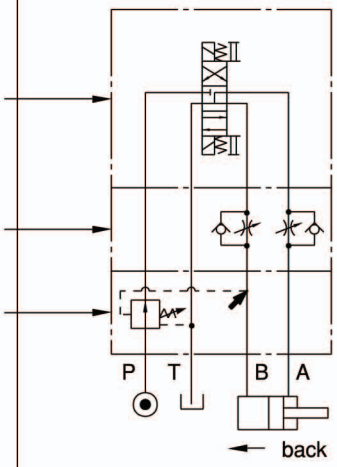	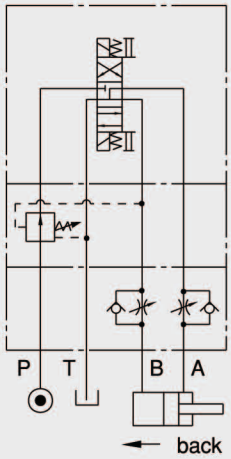	When DGMGV-05-B and DGMTC-05-W-O are used together in the same circuit, the right circuit is correct, and the left is wrong, as the function of DGMGV-05-B will be affected when oil flow from B port to T port. Because DGMTC-05-W-O will create a pressure which will cause DGMGV-05-B to reduce the pressure too low, and the cylinder then can not operate with enough force or move smoothly.

List of Modular Valve Series : 05 Size 10

Classification	Valve Name	Valve Model	Pressure Adjusting Range (bar)	Max. Flow (L/min)	Hydraulic Symbol	Weight (Kg)	Refer Page
Directional Control Valve	Solenoid Valve	DG05-＊-＊-70	320	160	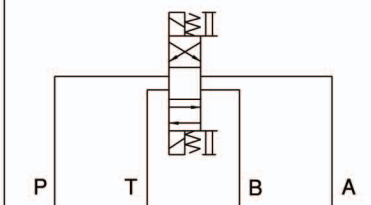		J 11-20
Pressure Control Valve	Relief Valve (Balance Type)	DGMRV-05-P-＊-10	0: 7~35	80	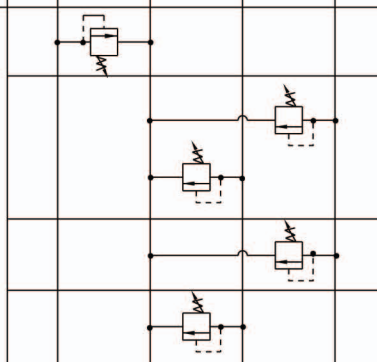	3.1	49
		DGMRV-05-W-＊-10	1: 7~70			3.9	
		DGMRV-05-A-＊-10	2: 7~140			3.1	
		DGMRV-05-B-＊-10	3: 7~210			3.1	
	Brake Valve (Direct type)	DGMBV-05-W-＊-10	1: 8~70	30	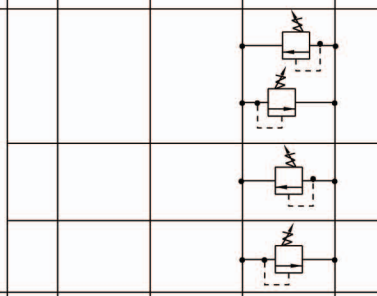	4.8	52
		DGMBV-05-A-＊-10	3: 35~210			4.0	
		DGMBV-05-B-＊-10				4.0	
	Reducing Valve (Direct type)	DGMGV-05-P-＊-10	0: 2.5~35	80	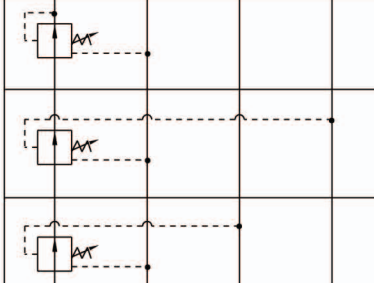	3.8	55
		DGMGV-05-A-＊-10	1: 7~70 2: 7~140			3.8	
		DGMGV-05-B-＊-10	3: 7~210			3.8	
	Counter Balance Valve	DGMCB-05-A1-＊-10	1: 7~70	80	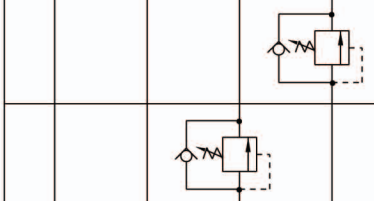	3.5	58
		DGMCB-05-B1-＊-10	2: 35~140			3.5	
	Sequence Valve	DGMSV-05-P2-＊-10	1: 7~70 2: 35~140	80		3.5	61

List of Modular Valve Series : 05 Size 10

Classification	Valve Name	Valve Model	Pressure Adjusting Range (bar)	Max. Flow (L/min)	Hydraulic Symbol (P T B A)	Weight (Kg)	Refer Page
Flow Control Valve	Flow Regulator Valve	DGMTV-05-P-10		100		2.5	64
	Flow Regulator with Check Valve	DGMTC-05-P-10	Cracking Pressure: 0.4	100		3.0	67
	Flow Regulator with Metered Out Check	DGMTC-05-W-O-10	Cracking Pressure: 1.0	100		3.1	70
		DGMTC-05-A-O-10				3.0	
		DGMTC-05-B-O-10				3.0	
	Flow Regulator with Metered In Check	DGMTC-05-W-I-10	Cracking Pressure: 1.0	100		3.1	70
		DGMTC-05-A-I-10				3.0	
		DGMTC-05-B-I-10				3.0	
Directional Control Valve	Check Valve	DGMCV-05-P-∗-10	Cracking Pressure: 1: 0.4 2: 3.5 3: 5.0	100		2.8	74
		DGMCV-05-T-∗-10				2.8	
		DGMCV-05-A-∗-10				3.6	
		DGMCV-05-B-∗-10				3.6	
	Vacuum Check Valve	DGMAC-05-W-10	Cracking Pressure: 0.15	100		3.5	77
	Pilot Check Valve	DGMPC-05-W-∗-10	Cracking Pressure: 1: 2 2: 5	100		3.6	80
		DGMPC-05-A-∗-10				3.6	
		DGMPC-05-B-∗-10				3.6	
	Pilot Check Valve (With decompression)	DGMPD-05-W-∗-10	Cracking Pressure: 1: 2 2: 5	100		3.6	83
		DGMPD-05-A-∗-10				3.6	
		DGMPD-05-B-∗-10				3.6	
Modular Block	Manifold Block	DGMFB-05-∗-10		100			86

Characteristics :

EDGMRV05 Size 10

- Highest performance in NG 10.
- Double stage pressure relief valves with balance poppet.
- Sandwich plate design.
- 4 pressure adjusting ranges.
- 4 optional effective directions of flow.
- With one or two pressure relief cartridges.
- Connections to DIN, ISO and CETOP.

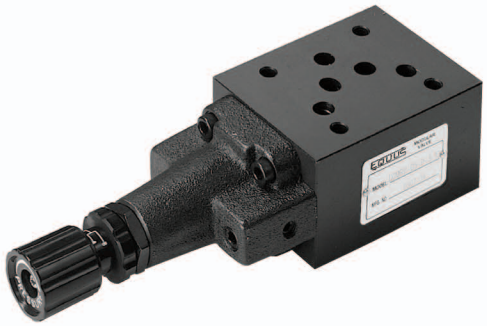

Model: DGMRV-05-P-1-10

Specification :

Maximum flow		80 ℓ /min {21.2 GPM}
Maximum operating pressure		320 bar {4570 PSI}
Pressure adjusting range		0: 7~35 bar
		1: 7~70 bar
		2: 7~140 bar
		3: 7~210 bar
Ambient temperature range		-20˚C~+50˚C
Hydraulic fluid temperature		-20˚C~+70˚C
Viscosity range		15~400 mm²/s
Hydraulic oil		ISO VG 32,46,68
Fluid cleanliness		NAS Class 9 MAX.
Mounting pattern		ISO 4401-AC-05-4-A
Weight	P type	3.1 kg
	W type	3.9 kg
	A type	3.1 kg
	B type	3.1 kg

Installation Dimensions :

(Machined valve mounting face with poisition of ports)

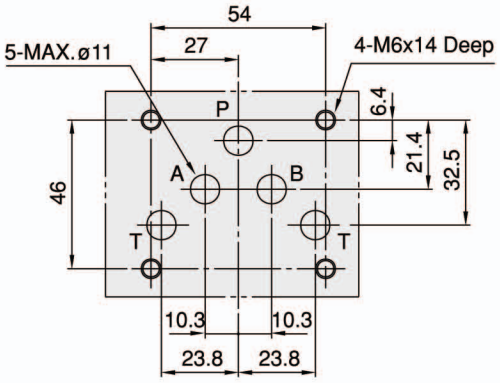

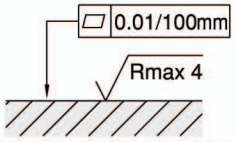

Required surface finish of mating piece

Hydraulic Configuration :

DGMRV-05-P- ∗-10

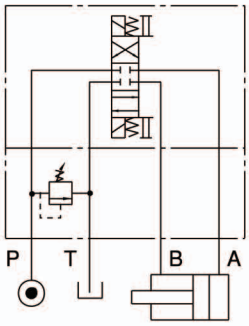

DGMRV-05-W- ∗-10

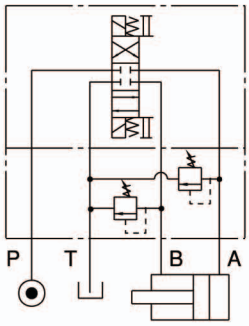

DGMRV-05-A- ∗-10

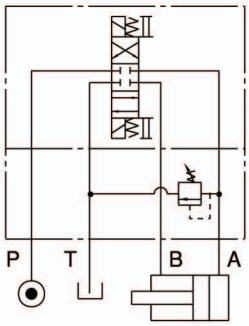

DGMRV-05-B- ∗-10

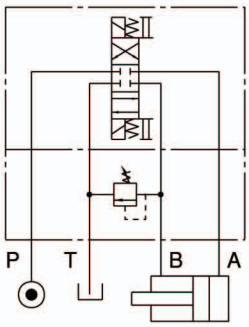

EDGMRV03 Size 6

Characteristics :

- Highest performance in NG 6.
- Double stage pressure relief valves with balanced poppet.
- Sandwich plate design.
- 5 pressure ranges.
- 4 optional effective directions of flow.
- With one or two pressure relief cartridges.
- Connections to DIN, ISO and CETOP.

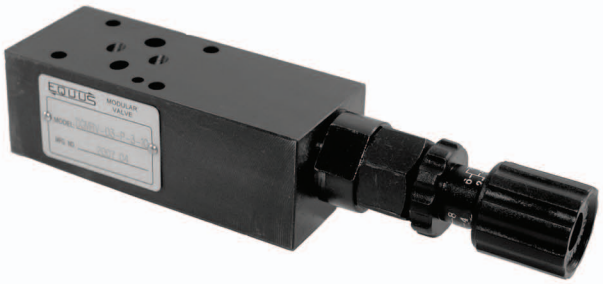

Model: DGMRV-03-P-1-10

Specification :

Maximum flow		50 ℓ /min {13.2 GPM}
Maximum operating pressure		320 bar {4570 PSI}
Pressure adjusting range		0: 7~35 bar
		1: 7~70 bar
		2: 7~140 bar
		3: 7~210 bar
		4: 35~320 bar
Ambient temperature range		-20˚C~+50˚C
Hydraulic fluid temperature		-20˚C~+70˚C
Viscosity range		15~400 mm²/s
Hydraulic oil		ISO VG 32, 46, 68
Fluid cleanliness		NAS Class 9 MAX.
Mounting pattern		ISO 4401-AB-03-4-A
Weight	P type	1.5 Kg
	W type	2.3 Kg
	A type	1.6 Kg
	B type	1.6 Kg

Installation Dimensions :

(Machined valve mounting face with poisition of ports)

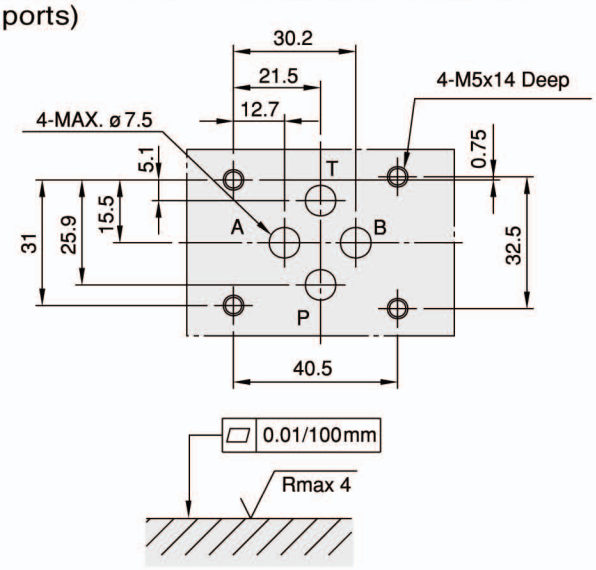

Required surface finish of mating piece

Hydraulic Configuration :

DGMRV-03-P- ∗-10

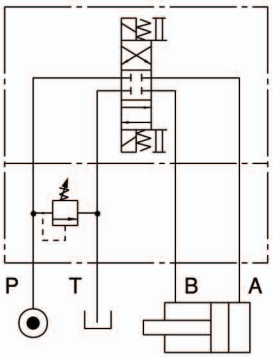

DGMRV-03-W- ∗-10

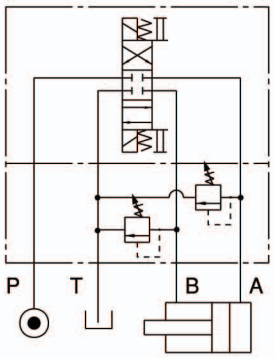

DGMRV-03-A- ∗-10

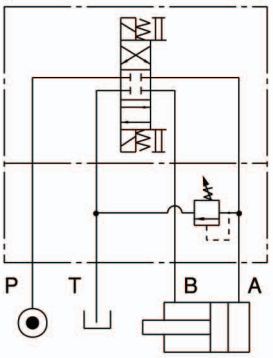

DGMRV-03-B- ∗-10

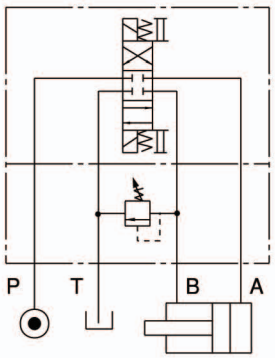

Ordering Code : EDGMRV05 Size 10

DGM RV - 05 - P - 1 - 10 - * *

1 2 3 4 5 6 7

1 Sandwich Plate Design

2 Pressure Relief Valve

3 Nominal Valve Size

- Nominal valve size: NG 10, CETOP 5 and ISO 4401-05.

4 Configuration

- P: single; acting on port P, discharge to port T
- W: double; acting on ports A and B, discharge to port T
- A: single; acting on port A, discharge to port T
- B: single; acting on port B, discharge to port T

5 Pressure Adjusting Range

- 0: 7~35 bar.
- 1: 7~70 bar.
- 2: 7~140 bar.
- 3: 7~210 bar.

6 Design Number

- 10: with handle
- 20: without handle

7 Optional Inquiry

Performance Curves :

Viscosity of Hydraulic Fluid: 32 mm²/s

Minimum Pressure Versus Flow Diagram

DGMRV-05- *-1-10

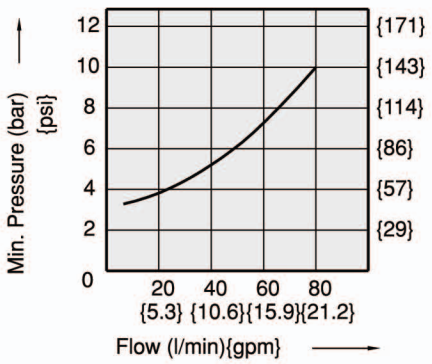

Regulated Pressure Versus Flow Diagram

DGMRV-05- *- *-10

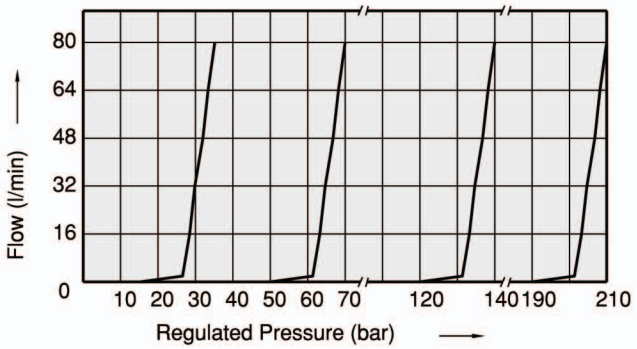

Dimensions : EDGMRV05 Size 10

DGMRV-05-W- ∗-10

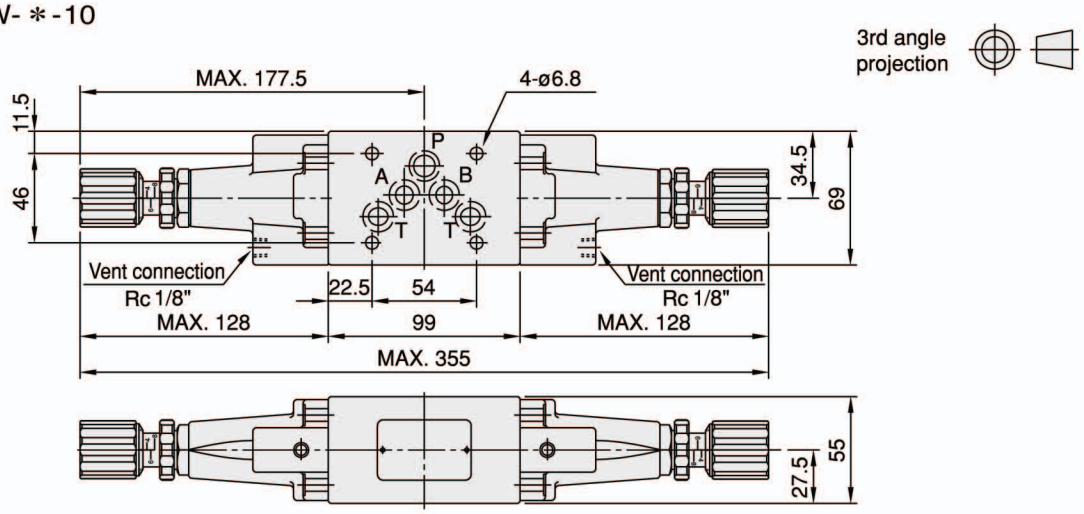

DGMRV-05-P- ∗-10

DGMRV-05-B- ∗-10

DGMRV-05-A- ∗-10

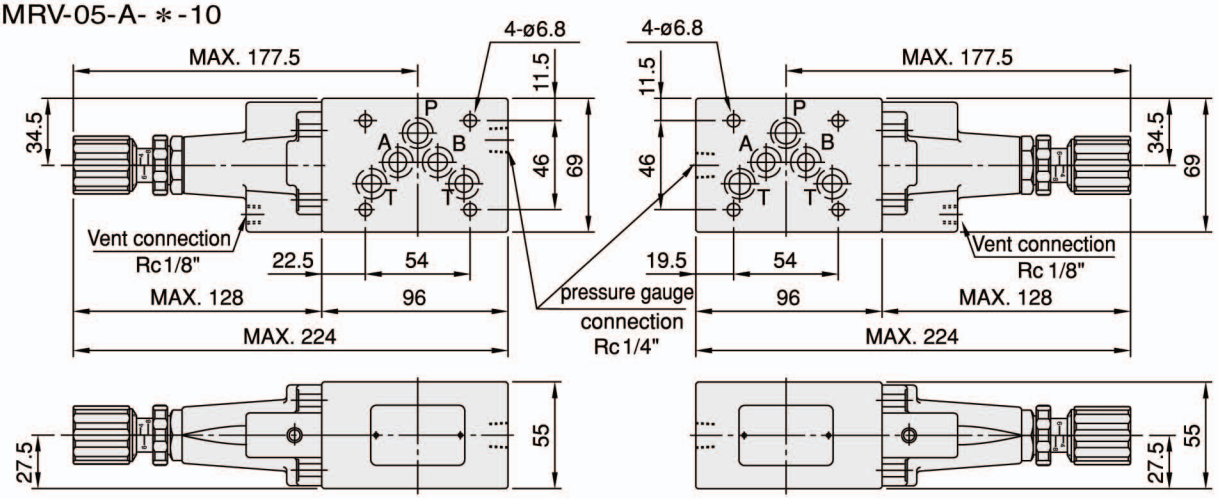

DGMRV-05- ∗- ∗-20

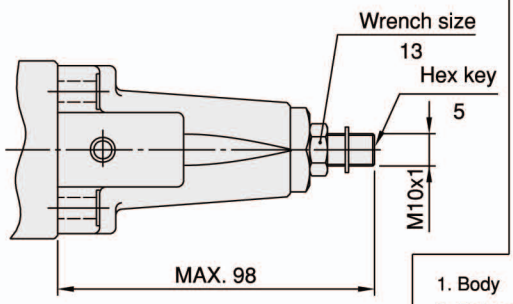

Cross Section Drawing :

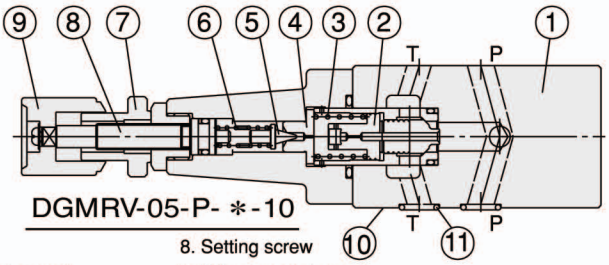

DGMRV-05-P- ∗-10

1. Body
2. Balanced poppet
3. Balanced poppet spring
4. Seat
5. Pilot valve poppet
6. Adjustment spring
7. Locking nut
8. Setting screw
9. Adjustment element
10. Connections to DIN 24340 from A10; valve fixing screws M6 DIN 912-10.9, tightening torque 12~15 Nm
11. O-ring AS586-014(Hs90) for ports A,B,P and T

EDGMBV05 Size 10

Characteristics :

- Highest performance in NG 10.
- Direct operated pressure relief valves.
- Sandwich plate design.
- 2 pressure adjusting ranges.
- 3 optional effective directions of flow.
- With one or two pressure relief cartridges.
- Connections to DIN, ISO and CETOP.

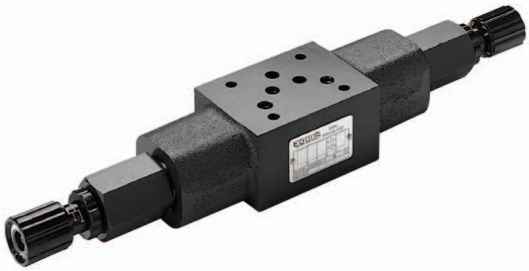

Model: DGMBV-05-W-1-10

Specification :

Maximum flow		30 ℓ /min {7.9 GPM}
Maximum operating pressure		320 bar {4570 PSI}
Pressure adjusting range		1: 8~70 bar
		3: 35~210 bar
Ambient temperature range		-20˚C~+50˚C
Hydraulic fluid temperature		-20˚C~+70˚C
Viscosity range		15~400 mm²/s
Hydraulic oil		ISO VG 32, 46, 68
Fluid cleanliness		NAS Class 9 MAX.
Mounting pattern		ISO 4401-AC-05-4-A
Weight	W type	4.8 Kg
	A type	4.0 Kg
	B type	4.0 Kg

Installation Dimensions :

(Machined valve mounting face with poisition of ports)

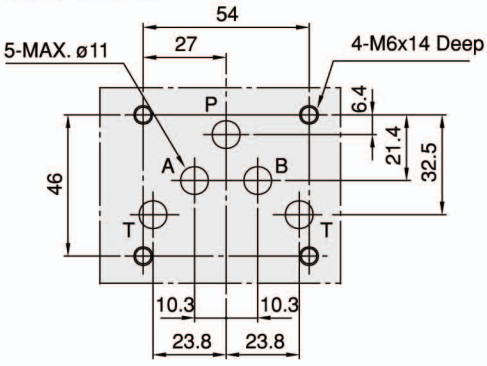

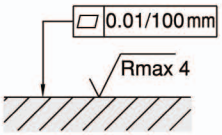

Required surface finish of mating piece

Hydraulic Configuration :

DGMBV-05-W- ∗-10

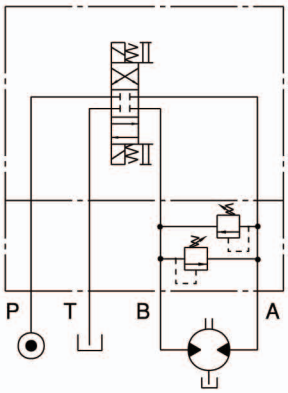

DGMBV-05-A- ∗-10

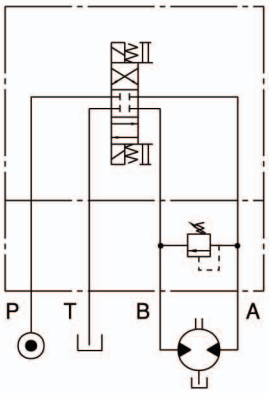

DGMBV-05-B- ∗-10

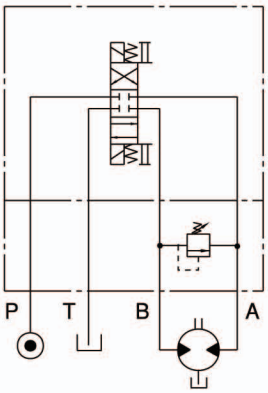

Ordering Code : EDGMBV05 Size 10

DGM BV - 05 - W - 1 - 10 - * *

1 2 3 4 5 6 7

1 Sandwich Plate Design

2 Pressure Brake Valve

3 Nominal Valve Size

- Nominal valve size: NG 10, CETOP 5 and ISO 4401-05.

4 Configuration

- W: double; acting on ports A and B, with the relieved pressure cross-discharged.
- A: single; acting on port A, discharge to port B.
- B: single; acting on port B, discharge to port A.

5 Pressure Adjusting Range

- 1: 8 ~ 70 bar.
- 3: 35 ~ 210 bar.

6 Design Number

- 10: with handle.
- 20: without handle.

7 Optional Inquiry

Performance Curves :

Viscosity of Hydraulic Fluid: 32 mm²/s

Regulated PressureVersus Flow Diagram

DGMBV-05- *- *-10

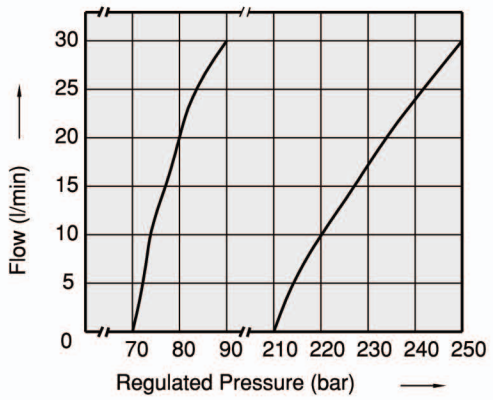

Dimensions : EDGMBV05 Size 10

DGMBV-05-W- ∗-10

3rd angle projection

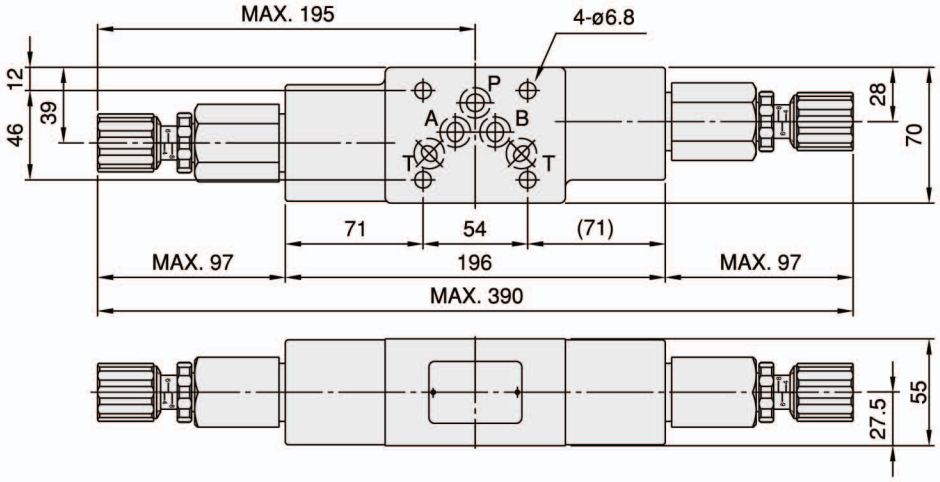

DGMBV-05-A- ∗-10

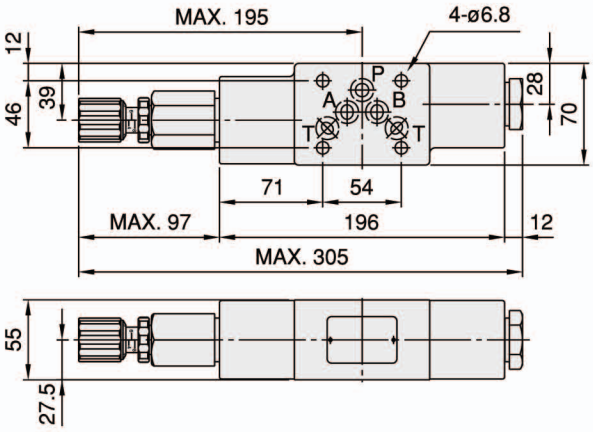

DGMBV-05-B- ∗-10

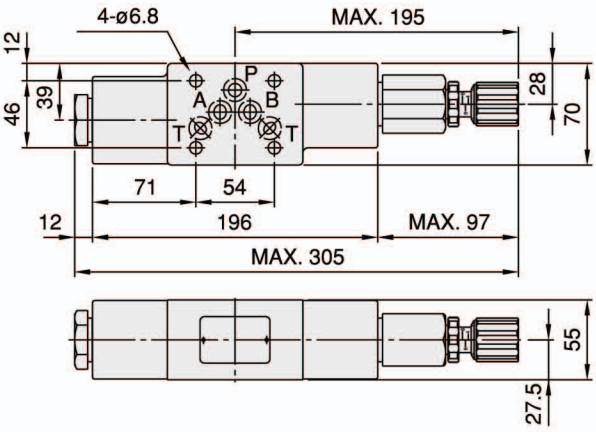

DGMBV-05- ∗- ∗- 20

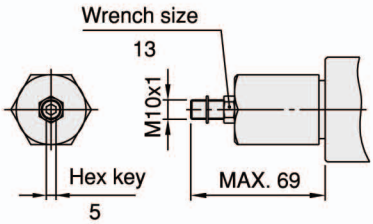

Cross Section Drawing :

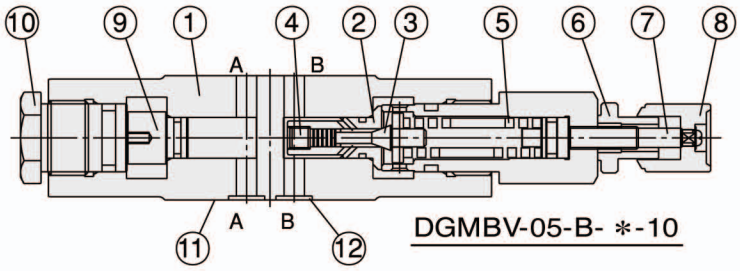

DGMBV-05-B- ∗-10

1. Body
2. Seat
3. Poppet
4. Orifice
5. Adjustment spring
6. Locking nut
7. Setting screw
8. Adjustment element
9. Plug
10. Bushing
11. Connections to DIN 24340 from A10; valve fixing screws M6 DIN 912-10.9, tightening torque 12~15 Nm
12. O-ring AS586-014(Hs90) for ports A,B,P and T

Characteristics :

EDGMGV05 Size 10

- Highest performance in NG 10.
- Direct operated pressure reducing valve.
- Sandwich plate design.
- 4 pressure adjusting ranges.
- 3 optional effective directions of flow.
- Pressure reduction in ports A,B or P.
- Connections to DIN, ISO and CETOP.

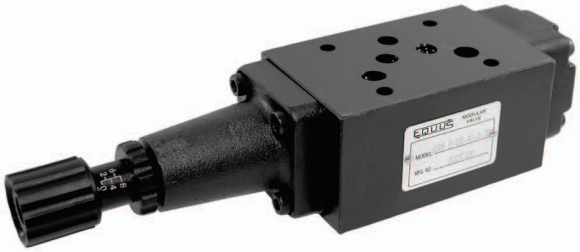

Model: DGMGV-05-P-1-10

Specification :

Maximum flow		80 ℓ/min {21.1 GPM}
Maximum operating pressure		320 bar {4570 PSI}
Pressure adjusting range		0: 2.5~35 bar
		1: 7~70 bar
		2: 7~140 bar
		3: 7~210 bar
Ambient temperature range		-20˚C~+50˚C
Hydraulic fluid temperature		-20˚C~+70˚C
Viscosity range		15~400 mm²/s
Hydraulic oil		ISO VG 32,46,68
Fluid cleanliness		NAS Class 9 MAX.
Mounting pattern		ISO 4401-AC-05-4-A
Weight	P type	3.8 kg
	A type	3.8 kg
	B type	3.8 kg

Installation Dimensions :

(Machined valve mounting face with poisition of ports)

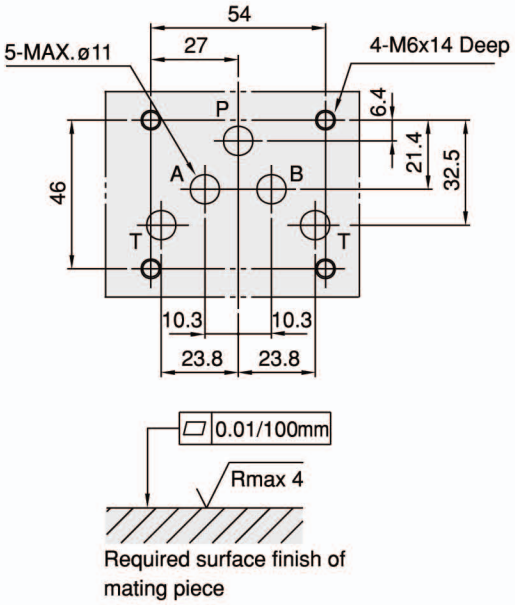

Hydraulic Configuration :

DGMGV-05-P- ∗-10

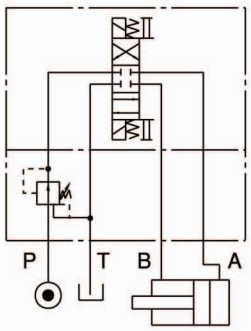

DGMGV-05-A- ∗-10

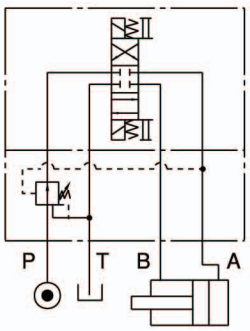

DGMGV-05-B- ∗-10

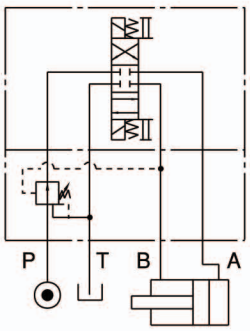

Ordering Code : EDGMGV05 Size 10

DGM GV - 05 - P - 1 - 10 - ∗∗

1 2 3 4 5 6 7

1 Sandwich Plate Design

2 Pressure Reducing Valve

3 Nominal Valve Size

- Nominal valve size: NG 10, CETOP 5 and ISO 4401-05.

4 Configuration

- P: reduced pressure on P port.
- A: reduced pressure on A port.
- B: reduced pressure on B port.

5 Pressure Adjusting Range

- 0: 2.5~35 bar. • 1: 7~70 bar. • 2: 7~140 bar. • 3: 7~210 bar.

6 Design Number

- 10: with handle.
- 20: without handle.

7 Optional Inquiry

- B: handle on B port side.

Performance Curves :

Viscosity of Hydraulic Fluid: 32 mm²/s

Pressure Drop Characteristic

DGMGV-05-P- ∗-10

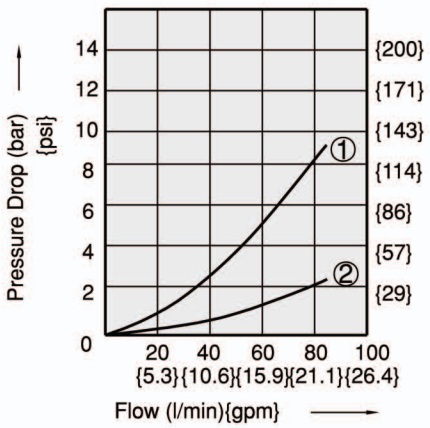

Regulated Pressure Versus Flow Diagram

DGMGV-05-P- ∗-10

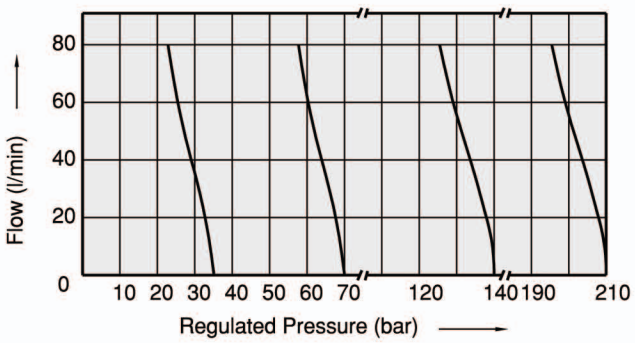

1. differential pressure variation versus variation of flow between inlet port and use port
2. differential pressure variation versus variation of flow between use port and discharge port

Dimensions : EDGMGV05 Size 10

DGMGV-05-P- ∗-10
DGMGV-05-B- ∗-10

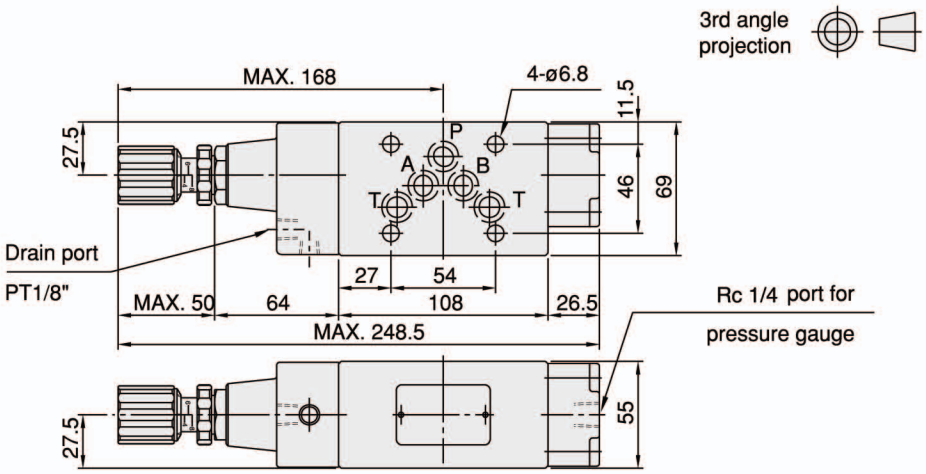

DGMGV-05-P- ∗-10-B
DGMGV-05-A- ∗-10

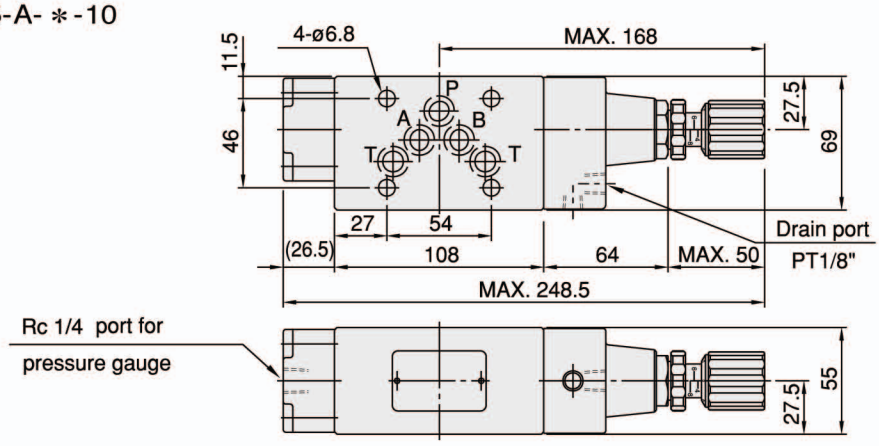

DGMGV-05- ∗- ∗ -20

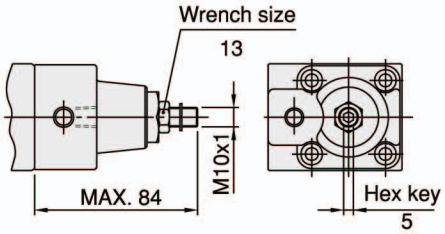

Cross Section Drawing :

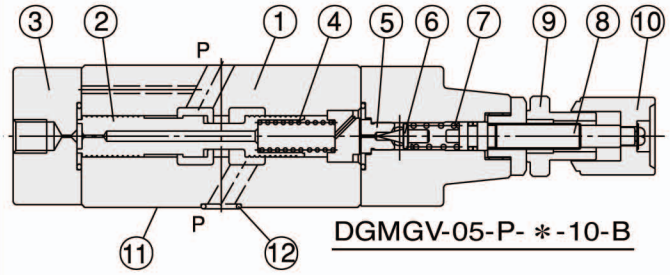

DGMGV-05-P- ∗-10-B

1. Body
2. Spool
3. Cover
4. Adjustment spring 1
5. Seat
6. Poppet
7. Adjustment spring 2
8. Setting screw
9. Locking nut
10. Adjustment element
11. Connections to DIN 24340 from A10; valve fixing screws M6 DIN 912-10.9, tightening torque 12~15 Nm
12. O-ring AS586-014(Hs90) for ports A,B,P and T

EDGMCB05 Size 10

Characteristics :

- Highest performance in NG 10.
- Direct operated pressure counter balance valve.
- Used for actuator back pressure control.
- Sandwich plate design.
- 2 pressure adjusting ranges.
- Connections to DIN, ISO and CETOP.

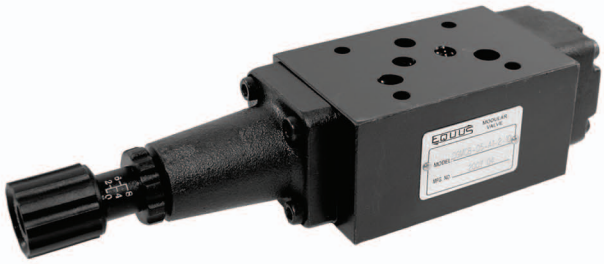

Model: DGMCB-05-A1-1-10

Specification :

Maximum flow	80 ℓ /min {21.1 GPM}
Maximum operating pressure	320 bar {4570 PSI}
Pressure adjusting range	1: 7.0~70 bar
	2: 35~140 bar
Ambient temperature range	-20˚C~+50˚C
Hydraulic fluid temperature	-20˚C~+50˚C

Viscosity range		15~400 mm²/s
Hydraulic oil		ISO VG 32,46,68
Fluid cleanliness		NAS Class 9 MAX.
Mounting pattern		ISO 4401-AC-05-4-A
Weight	A type	3.5 kg
	B type	3.5 kg

Hydraulic Configuration :

DGMCB-05-A1- ∗-10

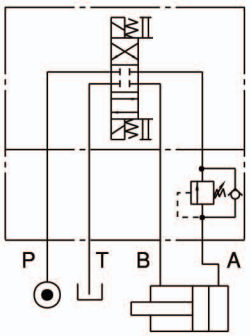

DGMCB-05-B1- ∗-10

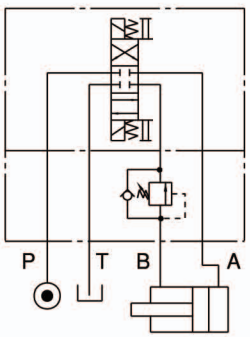

Installation Dimensions :

(Machined valve mounting face with poisition of ports)

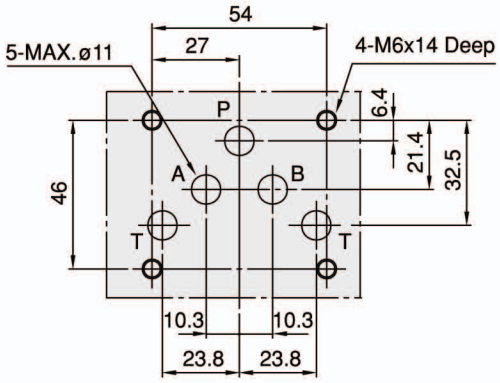

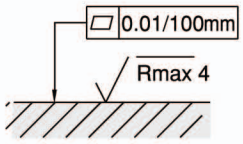

Required surface finish of mating piece

Ordering Code : EDGMCB05 Size 10

DGM CB - 05 - A1 - 1 - 10 - ∗∗

1 2 3 4 5 6 7 8

1 Sandwich Plate Design

2 Pressure Counter Balance Valve

3 Nominal Valve Size

- Nominal valve size: NG 10, CETOP 5 and ISO 4401-05.

4 Control Port

- A: A port.
- B: B port.

5 Type

- 1: internal pilot , internal drain.

6 Pressure Adjusting Range

- 1: 7.0 ~ 70 bar.
- 2: 35 ~ 140 bar.

7 Design Number

- 10: with handle.
- 20: without handle.

8 Optional Inquiry

Performance Curves :

Viscosity of Hydraulic Fluid: 32 mm²/s

Pressure Drop Characteristic

DGMCB-05-A1- ∗-10

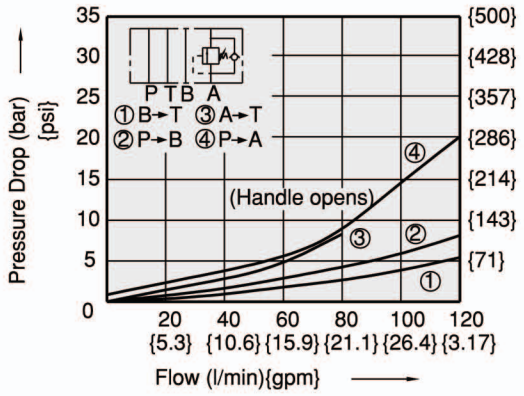

Regulated Pressure Versus Flow Diagram

DGMCB-05-A1- ∗-10 —— pressure increasing
DGMCB-05-B1- ∗-10 - - - pressure decreasing

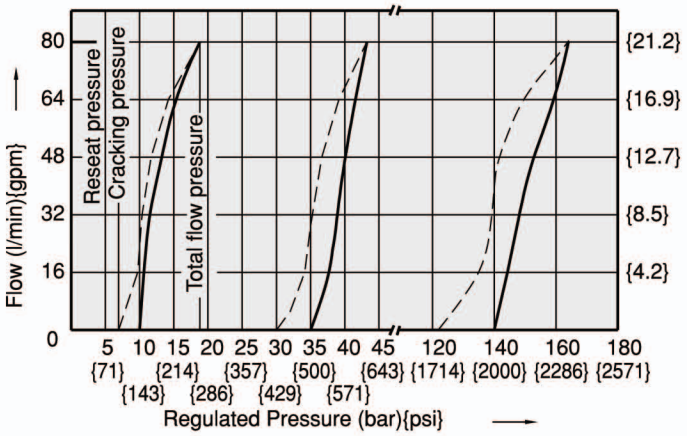

Ordering Code : EDGMRV03 Size 6

DGM RV - 03 - P - 1 - 10 - * *

1 2 3 4 5 6 7

1 Sandwich Plate Design

2 Pressure Relief Valve

3 Nominal Valve Size

- Nominal valve size: NG 6, CETOP 3 and ISO 4401-03.

4 Configuration

- P: single; acting on port P, discharge to port T.
- W: double; acting on ports A and B, discharge to port T.
- A: single; acting on port A, discharge to port T.
- B: single; acting on port B, discharge to port T.

5 Pressure Adjusting Range

- 0: 7~35 bar.
- 1: 7~70 bar.
- 2: 7~140 bar.
- 3: 7~210 bar.
- 4: 35~320 bar.

6 Design Number

- 10: with handle.
- 20: without handle.

7 Optional Inquiry

- Q: direct operated pressure relief valves.

Performance Curves :

Viscosity of Hydraulic Fluid: 32 mm²/s

Minimum Pressure Versus Flow Diagram

DGMRV-03- *-1-10

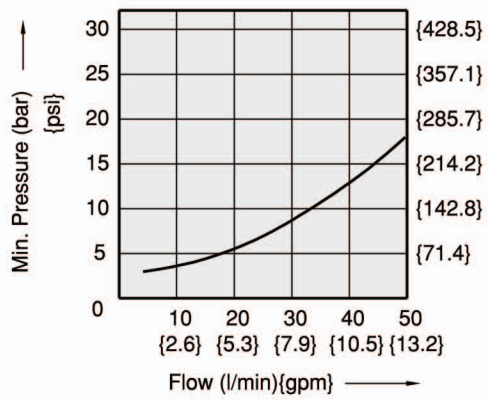

Regulated Pressure Versus Flow Diagram

DGMRV-03- *- *-10

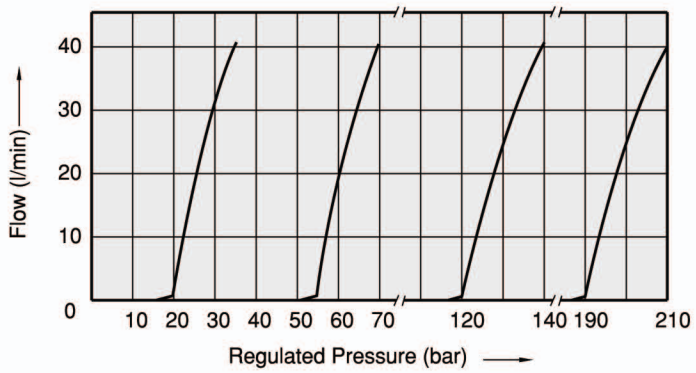

Dimensions : EDGMCB05 Size 10

DGMCB-05-A1- ∗-10

3rd angle projection

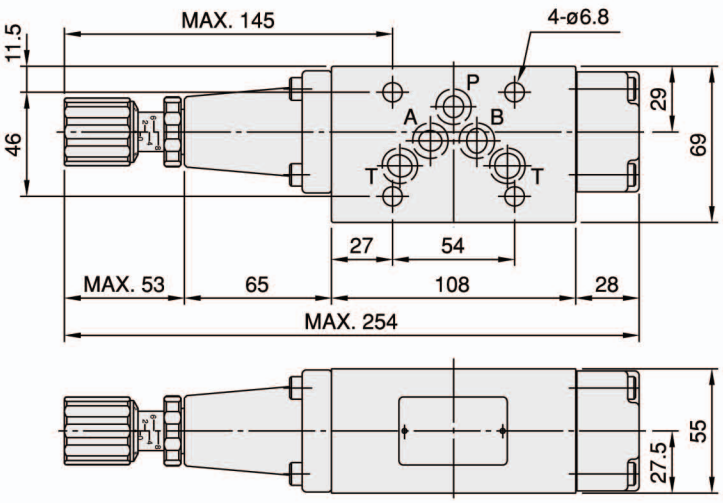

DGMCB-05-B1- ∗-10

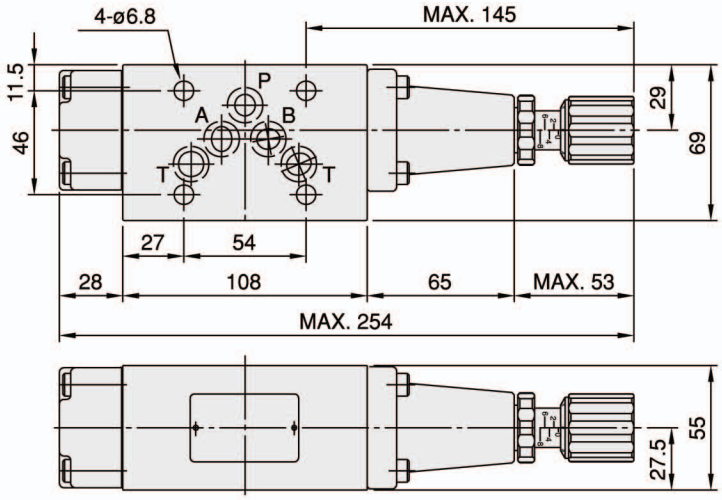

DGMCB-05- ∗- ∗-20

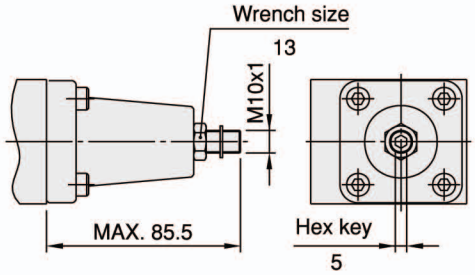

Cross Section Drawing :

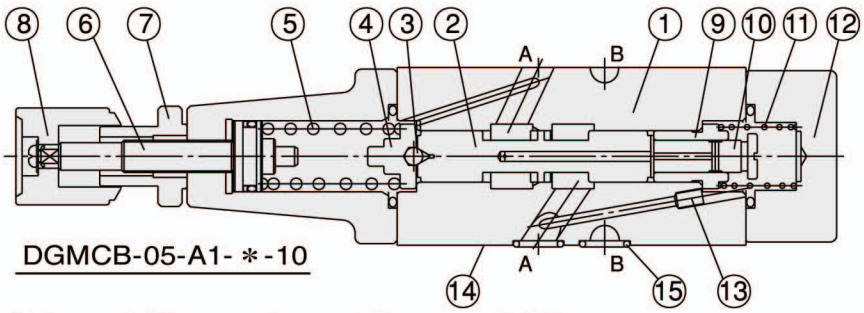

DGMCB-05-A1- ∗-10

1. Body
2. Spool
3. Ball
4. Retainer
5. Adjustment spring
6. Setting screw
7. Locking nut
8. Adjustment element
9. Sleeve
10. Piston
11. Sleeve spring
12. Cover
13. Orifce
14. Connections to DIN 24340 from A10; valve fixing screws M6 DIN 912-10.9, tightening torque 12~15 Nm
15. O-ring AS586-014(Hs90) for ports A,B,P and T

EDGMSV05 Size 10

Characteristics :

- Higest performance in NG 10.
- Direct operated pressure sequence valve.
- Sandwich plate design.
- 2 pressure adjusting ranges.
- Connections to DIN, ISO and CETOP.

Model: DGMSV-05-P2-1-10

Specification :

Maximum flow	80 ℓ/min {21.2 GPM}
Maximum operating pressure	320 bar {4750 PSI}
Pressure adjusting range	1: 7.0~70 bar
	2: 35~140 bar
Ambient temperature range	-20˚C~+50˚C
Hydraulic fluid temperature	-20˚C~+70˚C

Viscosity range	15~400 mm²/s
Hydraulic oil	ISO VG 32, 46, 68
Fluid cleanliness	NAS Class 9 MAX.
Mounting pattern	ISO 4401-AC-05-4-A
Weight	3.5 Kg

Hydraulic Configuration :

DGMSV-05-P2- ∗-10

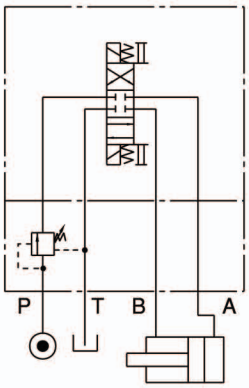

Installation Dimensions :

(Machined valve mounting face with poisition of ports)

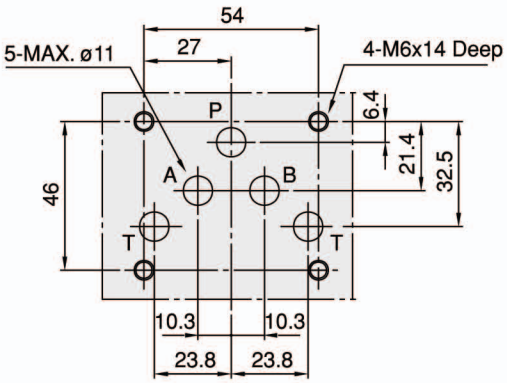

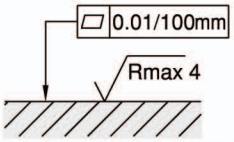

Required surface finish of mating piece

Ordering Code : EDGMSV05 Size 10

DGM SV - 05 - P2 - 1 - 10 - ＊＊

1 2 3 4 5 6 7 8

1 Sandwich Plate Design

2 Pressure Sequence Valve

3 Nominal Valve Size

- Nominal valve size: NG 10, CETOP 5 and ISO 4401-05.

4 Control Port

- P: P port.

5 Type

- 2: internal pilot, external drain.

6 Pressure Adjusting Range

- 1: 7.0 ~ 70 bar.
- 2: 35 ~ 140 bar.

7 Design Number

- 10: with handle.
- 20: without handle.

8 Optional Inquiry

Performance Curves :

Viscosity of Hydraulic Fluid: 32 mm²/s

Pressure Drop Characteristic

DGMSV-05-P2- ＊-10

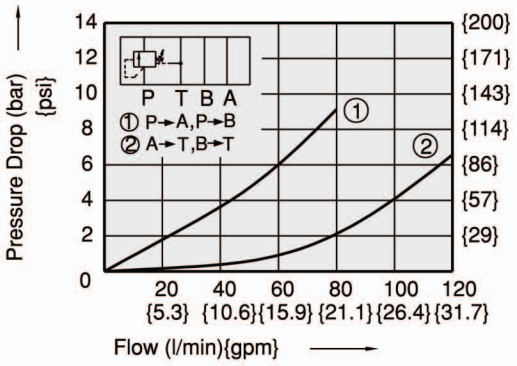

Regulated Pressure Versus Flow Diagram

DGMSV-05-P2- ＊-10

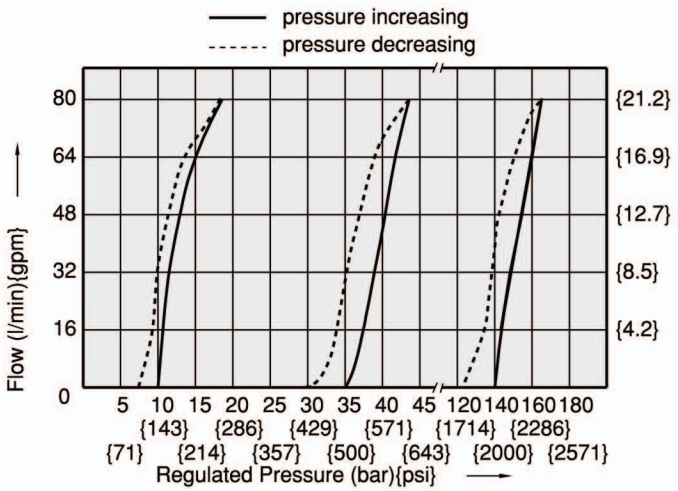

Dimensions : DGMSV05 Size 10

DGMSV-05-P2- ∗-10

3rd angle projection

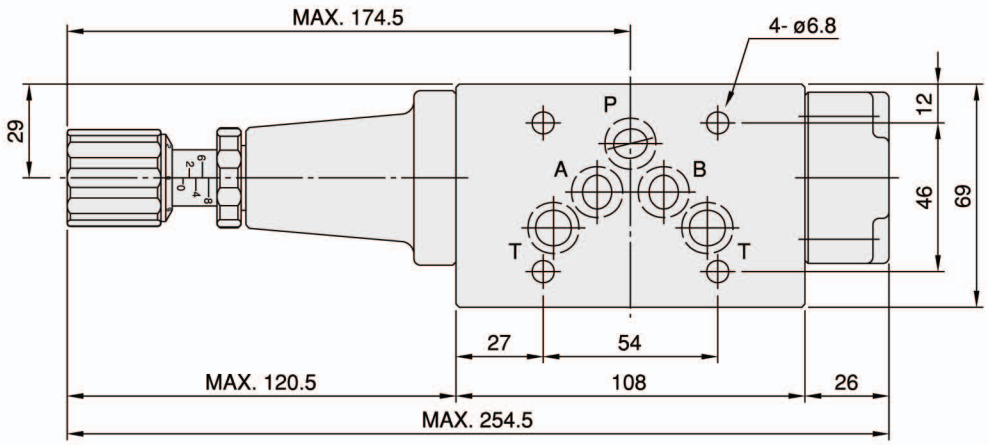

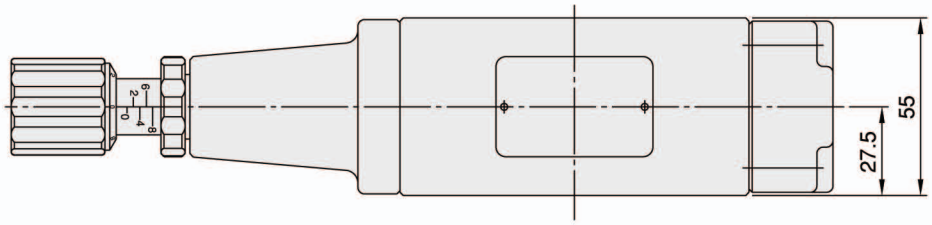

DGMSV-05-P2- ∗-20

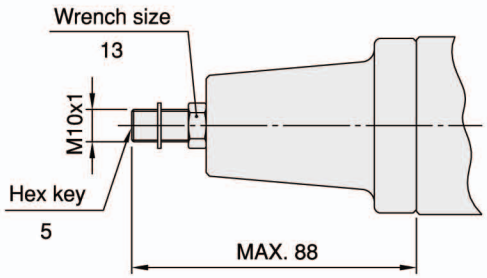

Cross Section Drawing :

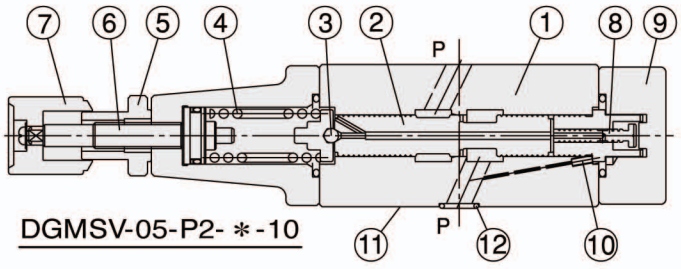

DGMSV-05-P2- ∗-10

1. Body
2. Spool
3. Ball
4. Adjustment spring
5. Locking nut
6. Setting screw
7. Adjustment element
8. Piston
9. Cover
10. Choke
11. Connections to DIN 24340 from A10; valve fixing screws M6 DIN 912-10.9, tightening torque 12~15 Nm
12. O-ring AS586-014(Hs90) for ports A,B,P and T

EDGMTV05 Size 10

Characteristics :

- Highest performance in NG 10.
- Sandwich plate design.
- Be used for actuator speed control.
- Connections to DIN, ISO and CETOP.

Specification :

Model: DGMTV-05-P-10

Maximum flow	100 ℓ/min {26.5 GPM}
Maximum operating pressure	320 bar {4570 PSI}
Ambient temperature range	-20˚C~+50˚C
Hydraulic fluid temperature	-20˚C~+70˚C
Viscosity range	15~400 mm²/s

Hydraulic oil		ISO VG 32, 46, 68
Fluid cleanliness		NAS Class 9 MAX.
Mounting pattern		ISO 4401-AC-05-4-A
Weight	P type	2.5 Kg
	T type	2.5 Kg

Hydraulic Configuration :

DGMTV-05-P-10

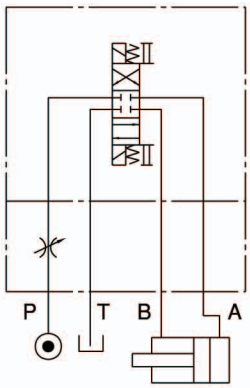

Installation Dimensions :

(Machined valve mounting face with poisition of ports)

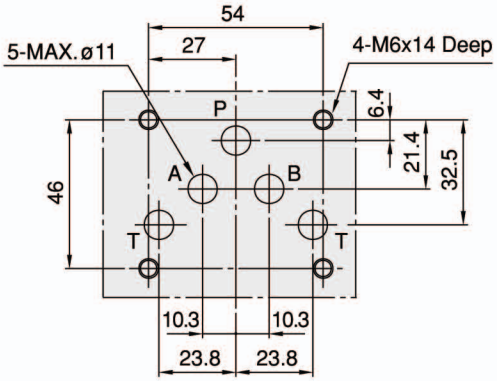

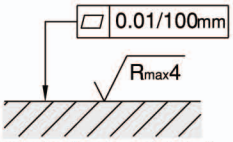

Required surface finish of mating piece

Ordering Code : EDGMTV05 Size 10

DGM TV - 05 - P - 10 - **

1 2 3 4 5 6

1 Sandwich Plate Design

2 Flow Regulator Valve

3 Nominal Valve Size

- Nominal valve size: NG 10, CETOP 5 and ISO 4401-05.

4 Configuration

- P: single; acting on port P.

5 Design Number

- 10: with handle.
- 20: without handle.

6 Optional Inquiry

Performance Curves :

Viscosity of Hydraulic Fluid: 32 mm²/s

Pressure Drop Characteristic

DGMTV-05-P-10

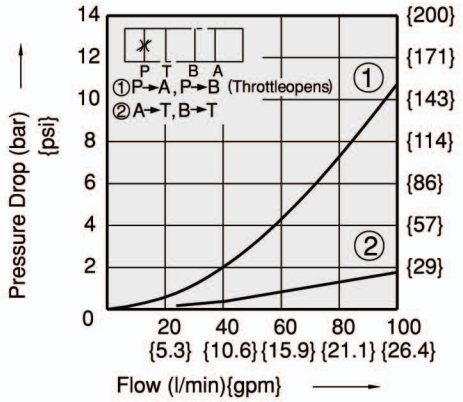

Stroke Versus Flow Diagram

DGMTV-05-P-10

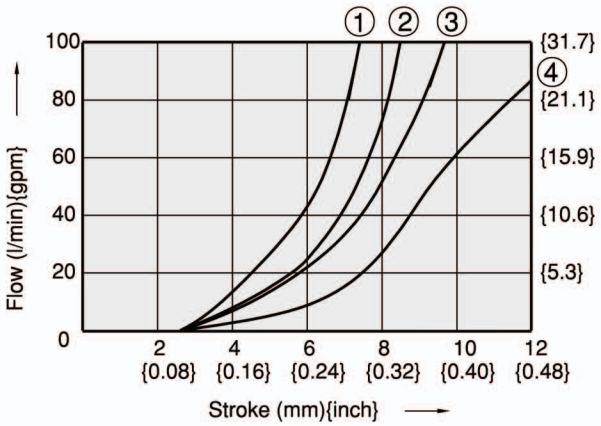

① Pressure Difference= 140 bar{2000psi}
② Pressure Difference= 70 bar{1000psi}
③ Pressure Difference= 35 bar{500psi}
④ Pressure Difference= 10 bar{143psi}

Dimensions : EDGMTV05 Size 10

DGMTV-05-P-10

3rd angle projection

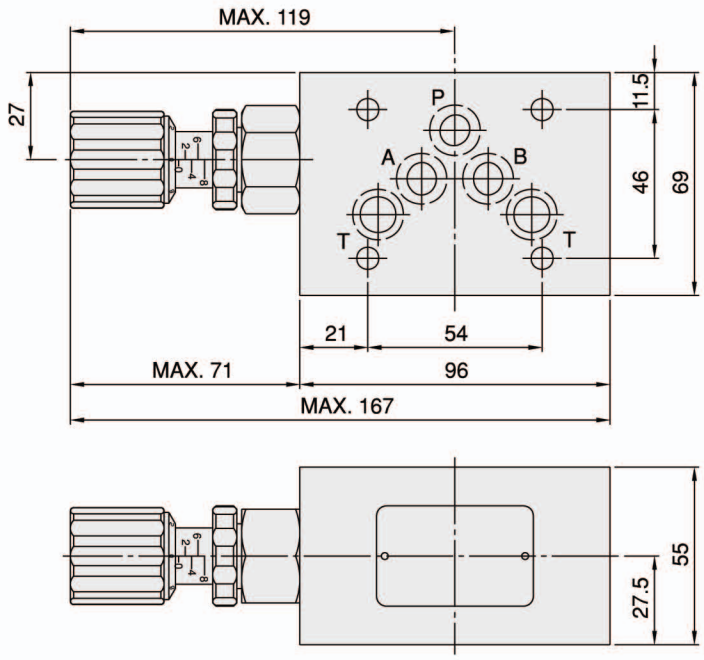

DGMTV-05-P-20

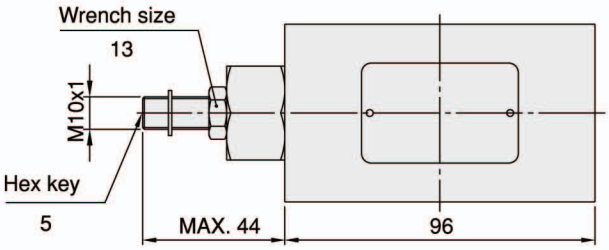

Cross Section Drawing :

DGMTV-05-P-10

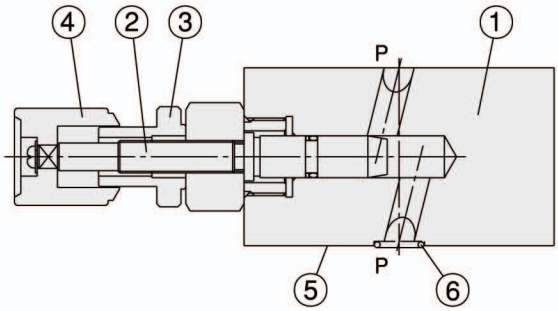

1. Body.
2. Setting screw.
3. Locking nut.
4. Adjustment element.
5. Connections to DIN 24340 from A10; valve fixing screws M6 DIN 912-10.9, tightening torque 12~15 Nm.
6. O-ring AS586-014(Hs90) for ports A,B,P and T.

Characteristics :

EDGMTC05 Size 10

- Highest performance in NG 10.
- Sandwich plate design.
- Connections to DIN, ISO and CETOP.

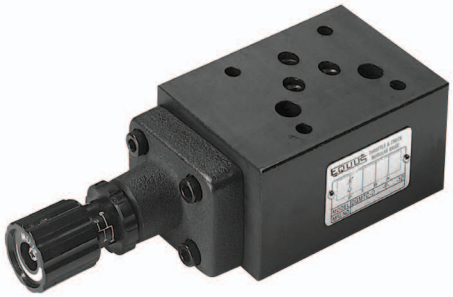

Specification :

Model: DGMTC-05-P-10

Maximum flow	100 ℓ/min {26.5 GPM}
Maximum operating pressure	320 bar {4570 PSI}
Check valve cracking pressure	0.4 bar {5.7 PSI}
Ambient temperature range	-20˚C~+50˚C
Hydraulic fluid temperature	-20˚C~+70˚C

Viscosity range	15~400 mm²/s
Hydraulic oil	ISO VG 32, 46, 68
Fluid cleanliness	NAS Class 9 MAX.
Mounting pattern	ISO 4401-AC-05-4-A
Weight	3.0 Kg

Hydraulic Configuration :

DGMTC-05-P-10

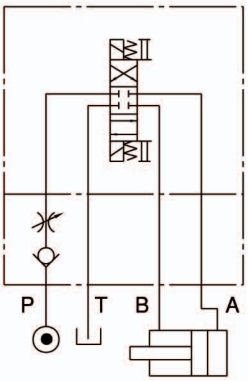

Installation Dimensions :

(Machined valve mounting face with poisition of ports)

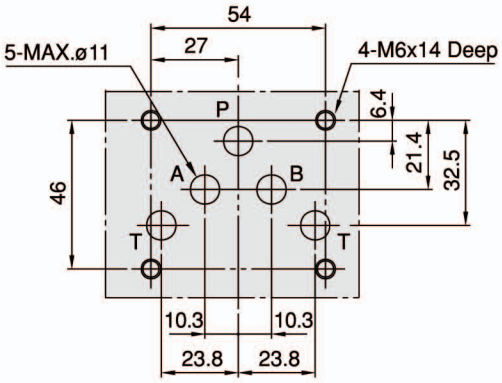

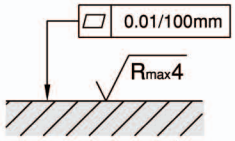

Required surface finish of mating piece

Ordering Code : EDGMTC05 Size 10

DGM TC - 05 - P - 10 - * *

1 2 3 4 5 6

1 Sandwich Plate Design

2 Flow Regulator Valve with Check Valve

3 Nominal Valve Size

- Nominal valve size: NG 10, CETOP 5 and ISO 4401-05.

4 Configuration

- P: single; acting on port P.

5 Design Number

- 10: with handle.
- 20: without handle.

6 Optional Inquiry

Performance Curves :

Viscosity of Hydraulic Fluid: 32 mm²/s

Pressure Drop Characteristic

DGMTC-05-P-10

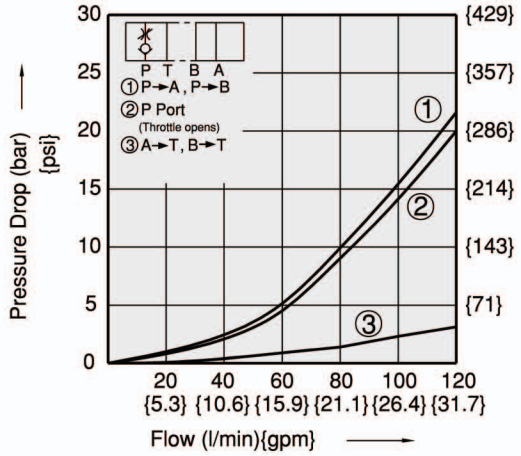

Stroke Versus Flow Diagram

DGMTC-05-P-10

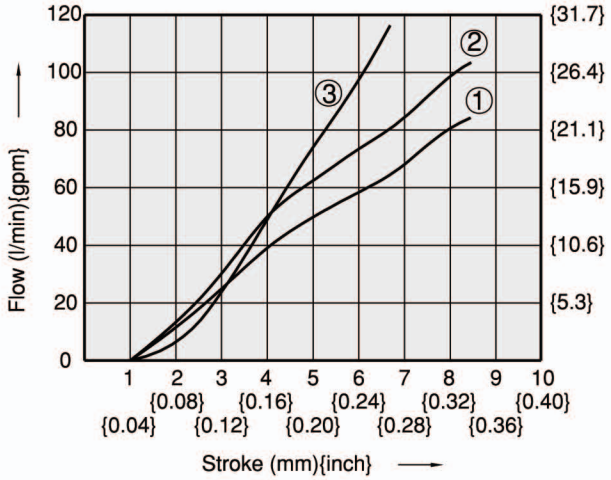

① Pressure Difference= 10 bar{143psi}
② Pressure Difference= 15 bar{214psi}
③ Pressure Difference= 50 bar{714psi}

Dimensions : EDGMTC05 Size 10

DGMTC-05-P-10

3rd angle projection

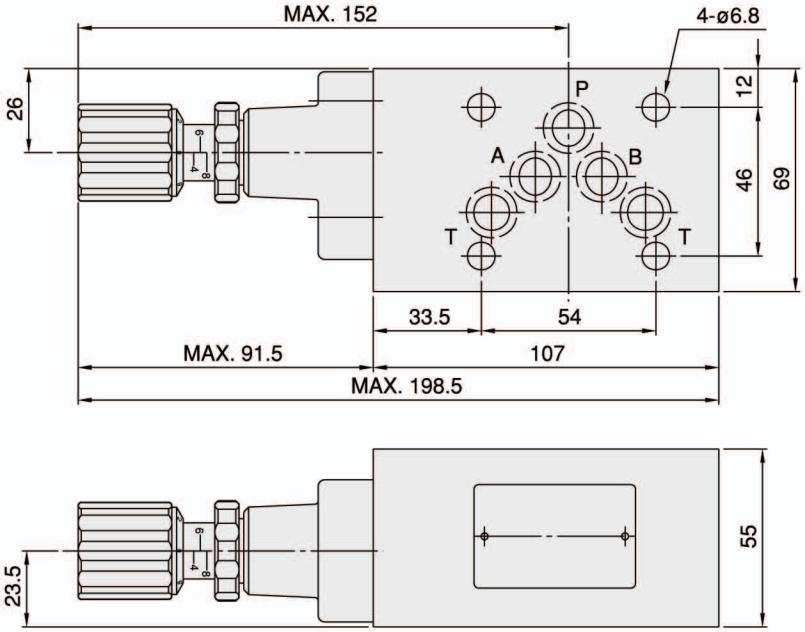

DGMTC-05-P-20

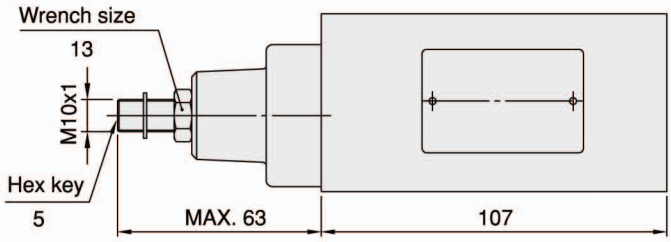

Cross Section Drawing :

DGMTC-05-P-10

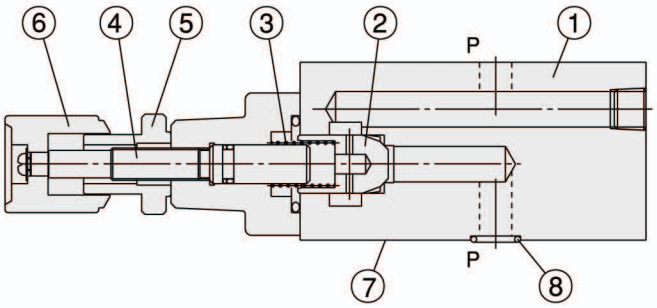

1. Body.
2. Throttle.
3. Spring.
4. Setting screw.
5. Locking nut.
6. Adjustment element.
7. Connections to DIN 24340 from A10; valve fixing screws M6 DIN 912-10.9, tightening torque 12~15 Nm.
8. O-ring AS586-014(Hs90) for ports A,B,P and T.

Dimensions : EDGMRV03 Size 6

DGMRV-03-W- ∗-10

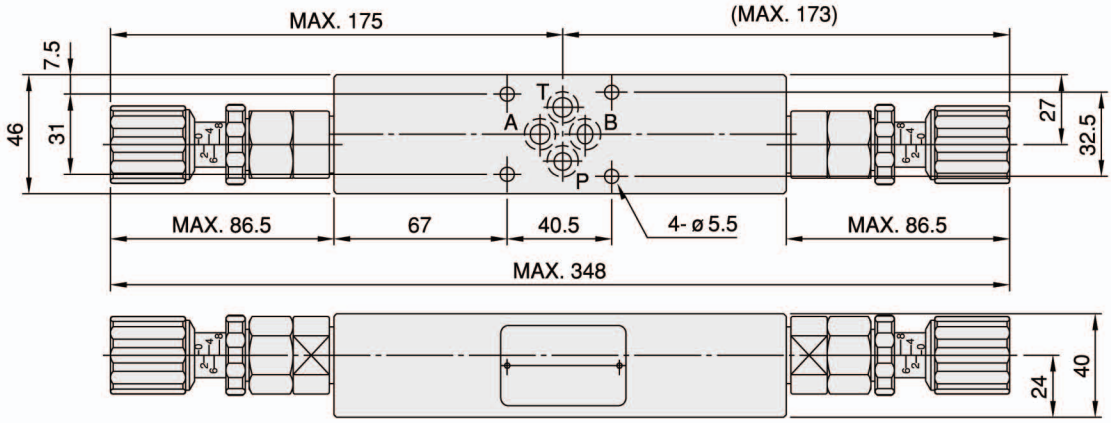

DGMRV-03-P- ∗-10

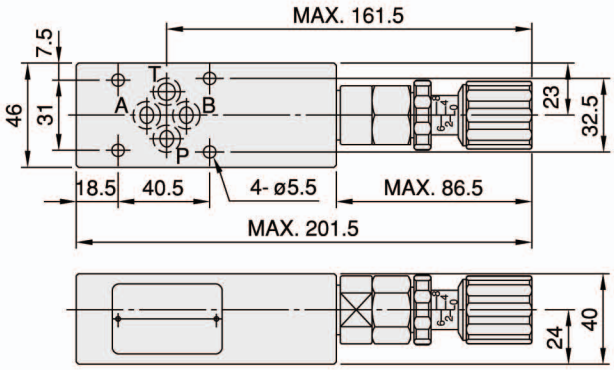

DGMRV-03-A- ∗-10

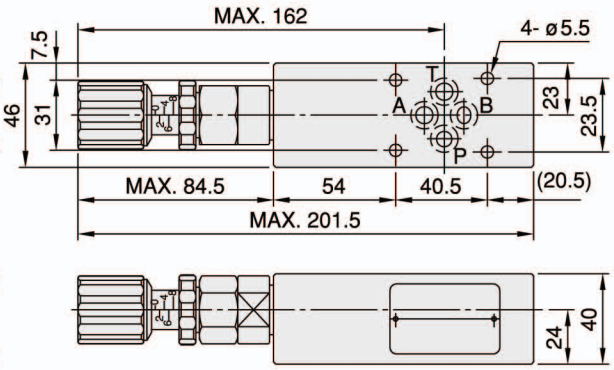

DGMRV-03-B- ∗-10

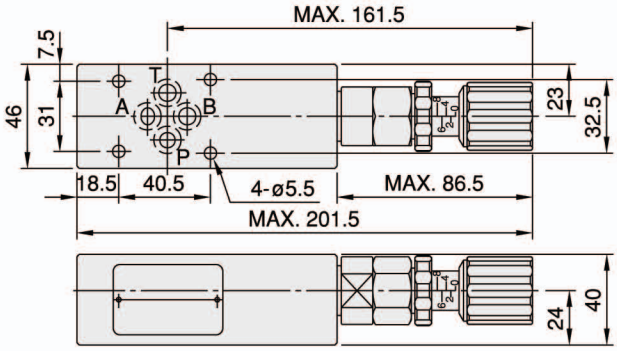

DGMRV-03- ∗- ∗-20

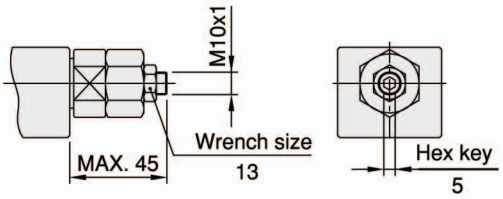

Cross Section Drawing :

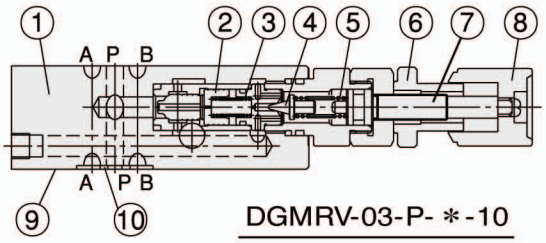

DGMRV-03-P- ∗-10

1. Body.
2. Balanced poppet.
3. Balanced poppet spring.
4. Pilot valve poppet.
5. Adjustment spring.
6. Locking nut.
7. Setting screw.
8. Adjustment element.
9. Connections to DIN 24340 from A6; valve fixing screws M5 DIN 912-10.9, tightening torque 8~9 Nm.
10. O-ring 1B-P9 for ports A, B, P and T.

Characteristics :

EDGMTC05 Size 10

- Highest performance in NG 10.
- Sandwich plate design.
- For limiting the main or pilot fluid flow of 2 actuator connections.
- For meter-in or meter-out control.
- Connections to DIN, ISO and CETOP.

Model: DGMTC-05-W-O-10

Specification :

Maximum flow	100 ℓ/min {26.5 GPM}
Maximum operating pressure	320 bar {4570 PSI}
Check valve cracking pressure	1.0 bar {14.3 PSI}
Ambient temperature range	-20˚C~+50˚C
Hydraulic fluid temperature	-20˚C~+70˚C
Viscosity range	15~400 mm²/s

Hydraulic oil		ISO VG 32, 46, 68
Fluid cleanliness		NAS Class 9 MAX.
Mounting pattern		ISO 4401-AC-05-4-A
Weight	W type	3.1 Kg
	A type	3.0 Kg
	B type	3.0 kg

Hydraulic Configuration :

DGMTC-05-W-O-10

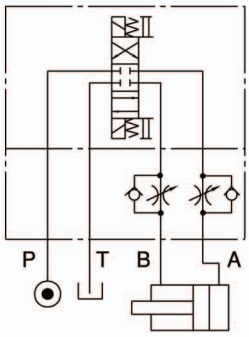

DGMTC-05-A-O-10

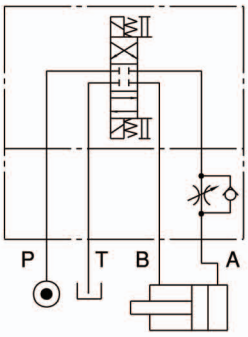

DGMTC-05-B-O-10

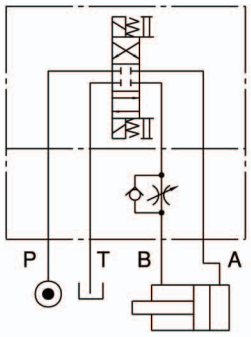

DGMTC-05-W-I-10

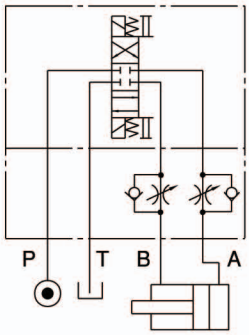

DGMTC-05-A-I-10

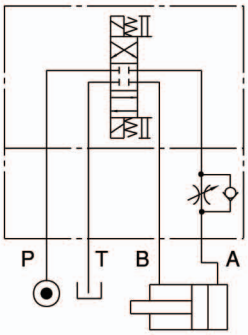

DGMTC-05-B-I-10

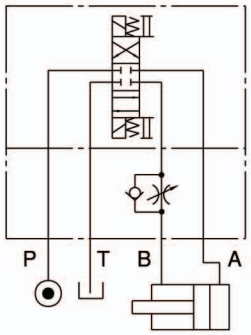

Ordering Code : EDGMTC05 Size 10

DGM	TC	-	05	-	W	-	O	-	10	-	**
1	2		3		4		5		6		7

1 Sandwich Plate Design

2 Flow Regulator with Check Valve

3 Nominal Valve Size

- Nominal valve size: NG 10, CETOP 5 and ISO 4401-05.

4 Configuration

- W: double: acting on ports A and B.
- A: single; acting on port A.
- B: single; acting on port B.

5 Control Way

- O: Metered out, control of flow discharged from the actuator.
- I : Metered in, control of flow entering the actuator.

6 Design Number

- 10: with handle.
- 20: without handle.

7 Optional Inquiry

Performance Curves :

Viscosity of Hydraulic Fluid: 32 mm²/s

Pressure Drop Characteristic

DGMTC-05-W-O-10
(DGMTC-05-W-I-10)

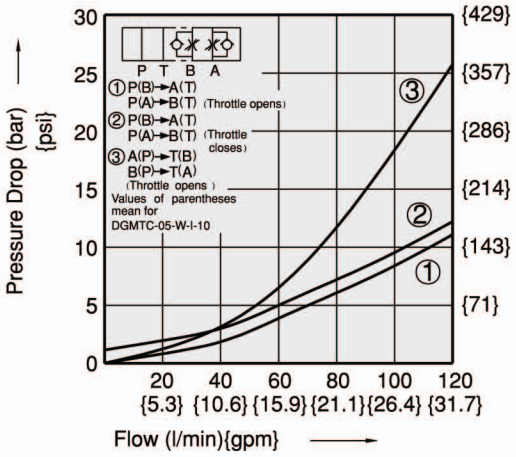

Stroke Versus Flow Diagram

DGMTC-05-W-O(I)-10
DGMTC-05-A-O(I)-10
DGMTC-05-B-O(I)-10

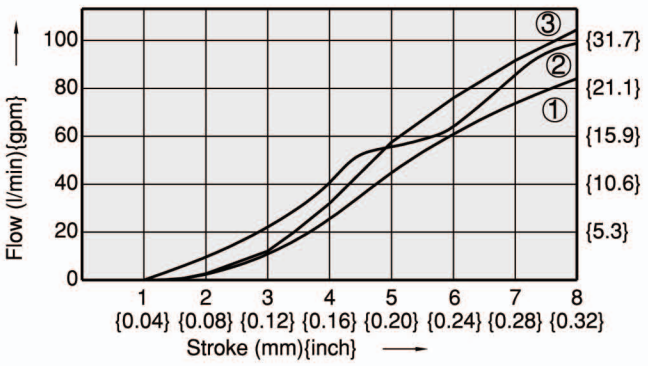

①Pressure Difference= 10 bar{143psi}
②Pressure Difference= 15 bar{214psi}
③Pressure Difference= 50 bar{714psi}

Dimensions : EDGMTC05 Size 10

DGMTC-05-W-O-10

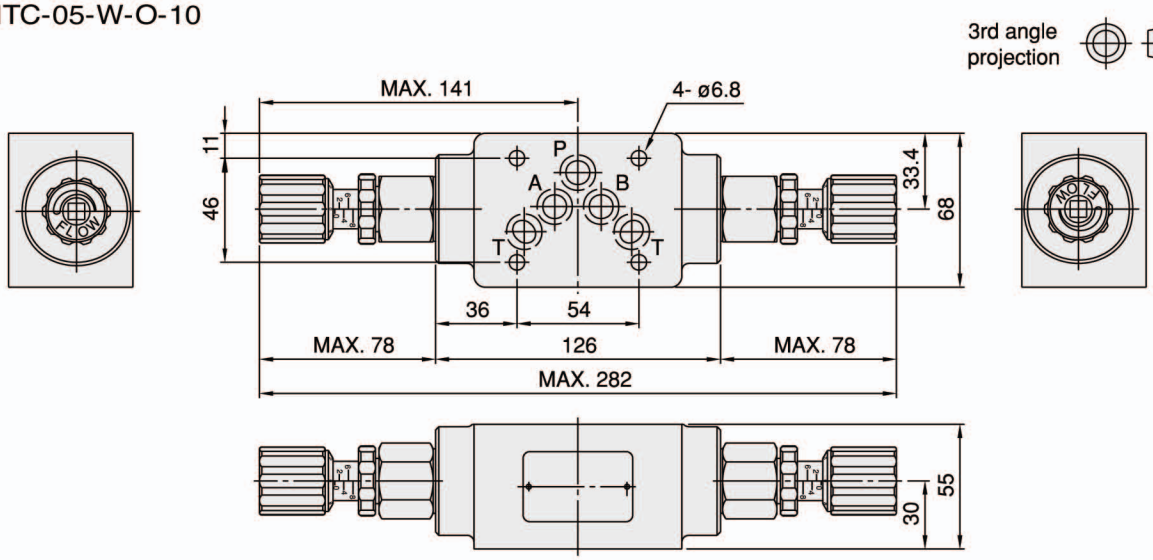

DGMTC-05-A-O-10

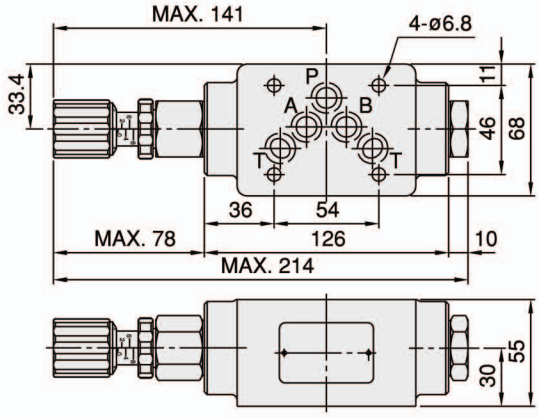

DGMTC-05-B-O-10

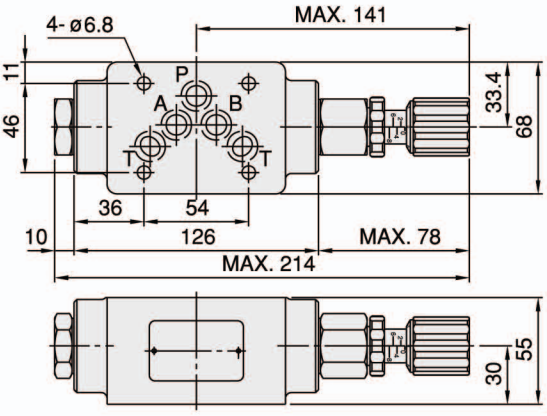

DGMTC-05- ∗ -O-20

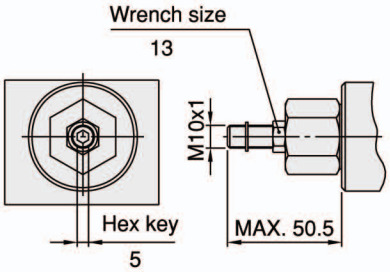

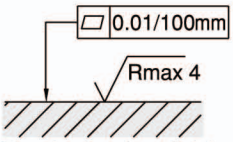

Required surface finish of mating piece

Cross Section Drawing :

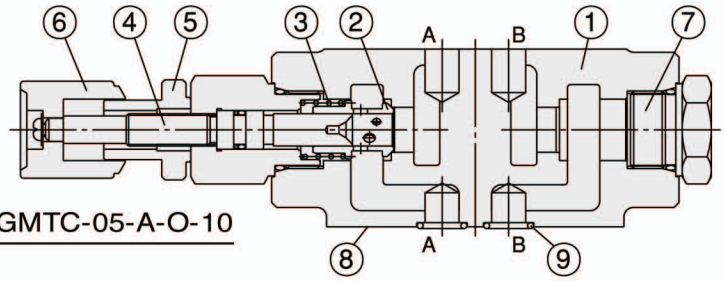

DGMTC-05-A-O-10

1. Body
2. Throttle
3. Spring
4. Setting screw
5. Locking nut
6. Adjustment element
7. Bushing
8. Connections to DIN 24340 from A10; valve fixing screws M6 DIN 912-10.9, tightening torque 12~15 Nm
9. O-ring AS586-014(Hs90) for ports A,B,P and T

Dimensions : EDGMTC05 Size 10

DGMTC-05-W-I-10

3rd angle projection

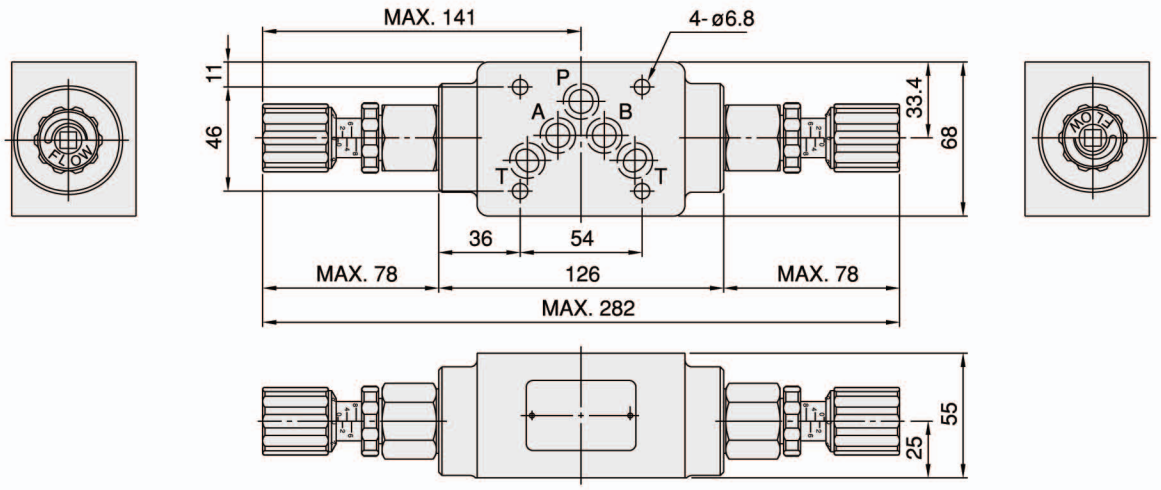

DGMTC-05-A-I-10

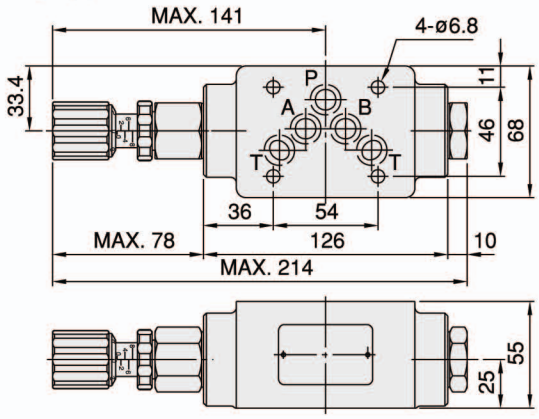

DGMTC-05-B-I-10

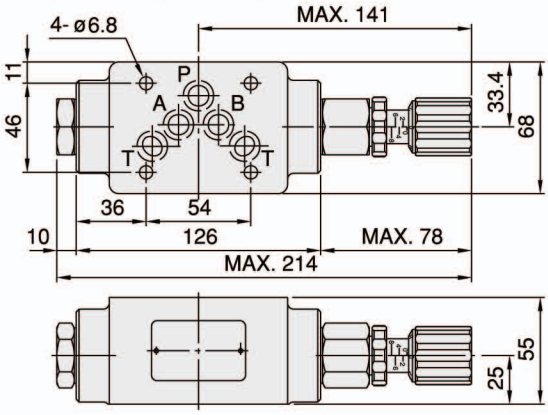

DGMTC-05- ∗-I-20

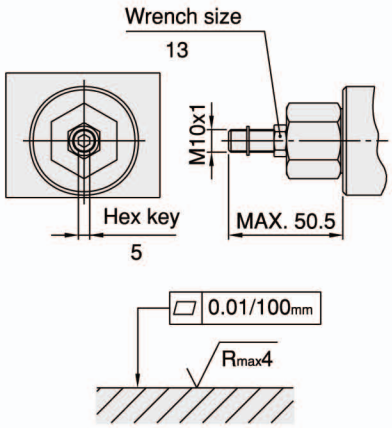

Required surface finish of mating piece

Cross Section Drawing :

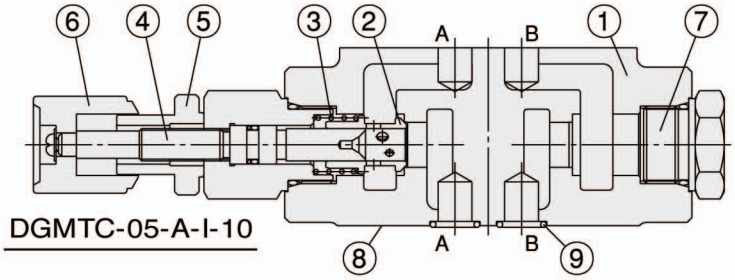

DGMTC-05-A-I-10

1. Body
2. Throttle
3. Spring
4. Setting screw
5. Locking nut
6. Adjustment element
7. Bushing
8. Connections to DIN 24340 from A10; valve fixing screws M6 DIN 912-10.9, tightening torque 12~15 Nm
9. O-ring AS586-014(Hs90) for ports A,B,P and T

Characteristics :

EDGMCV05 Size 10

- Highest performance in NG 10.
- Sandwich plate design for use in vertical stacking assemblies.
- Direct operated check valve.
- 4 different isolating functions.
- Connections to DIN, ISO and CETOP.

Specification :

Model: DGMCV-05-P-1-10

Maximum flow	100 ℓ/min {26.5 GPM}
Maximum operating pressure	320 bar {4570 PSI}
Spring cracking pressure	1: 0.4 bar{5.7 PSI}
	2: 3.5 bar{50 PSI}
	3: 5.0 bar{71 PSI}
Ambient temperature range	-20˚C~+50˚C
Hydraulic fluid temperature	-20˚C~+70˚C
Viscosity range	15~400 mm²/s

Hydraulic oil		ISO VG 32,46,68
Fluid cleanliness		NAS Class 9 MAX.
Mounting pattern		ISO 4401-AC-05-4-A
Weight	P type	2.8 kg
	T type	2.8 kg
	A type	3.6 kg
	B type	3.6 kg

Hydraulic Configuration :

DGMCV-05-P- ∗-10

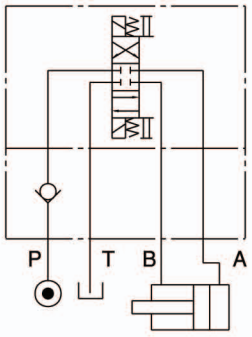

DGMCV-05-T- ∗-10

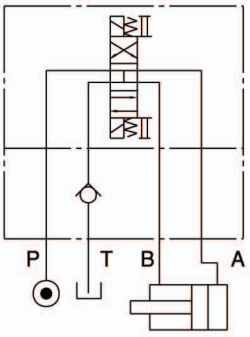

DGMCV-05-A- ∗-10

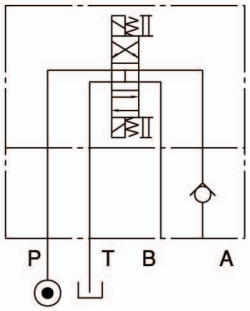

DGMCV-05-B- ∗-10

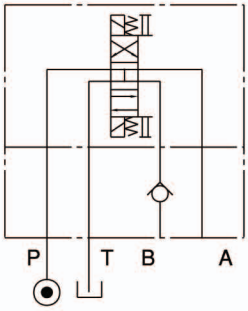

Ordering Code : EDGMCV05 Size 10

DGM	CV	-	05	-	P	-	1	-	10	-	* *
1	2		3		4		5		6		7

1 Sandwich Plate Design

2 Check Valve

3 Nominal Valve Size

- Nominal valve size: NG 10, CETOP 5 and ISO 4401-05.

4 Configuration

- P : single; acting on port P.
- T : single; acting on port T.
- A : single; acting on port A.
- B : single; acting on port B.

5 Spring Cracking Pressure

- 1: 0.4 bar.
- 2: 3.5 bar.
- 3: 5.0 bar.

6 Design Number

7 Optional Inquiry

Performance Curves :

Viscosity of Hydraulic Fluid: 32 mm²/s

Pressure Drop Characteristic

DGMCV-05-P- * -10

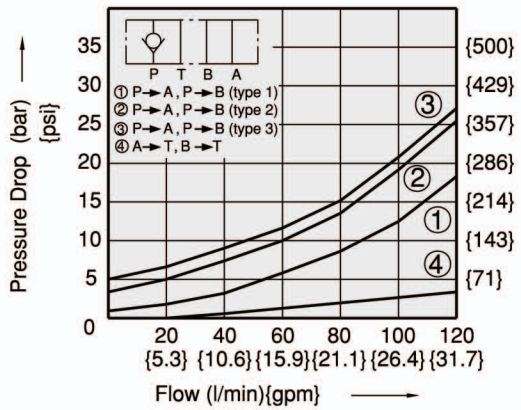

Installation Dimensions :

(Machined valve mounting face with poisition of ports)

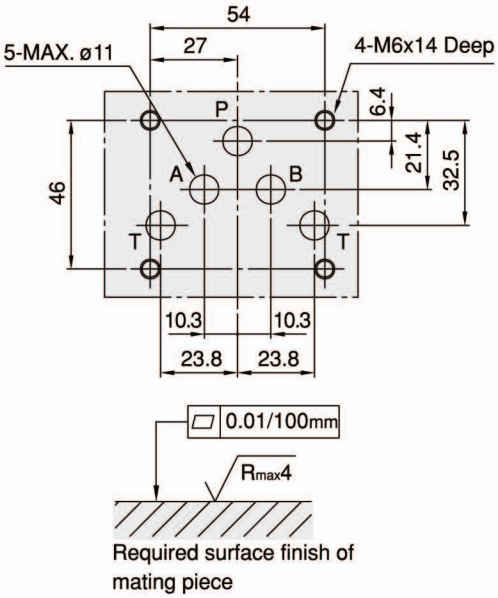

Dimensions : EDGMCV05 Size 10

DGMCV-05-P- ∗-10

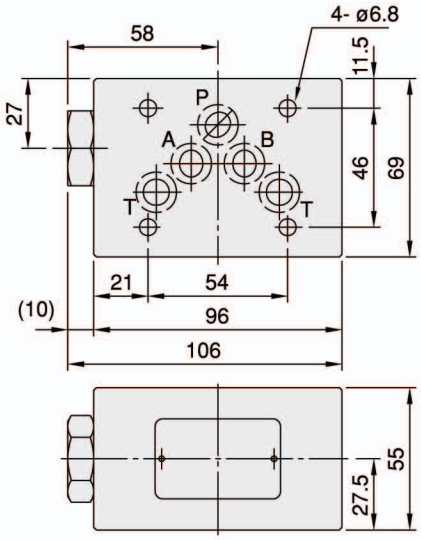

DGMCV-05-T- ∗-10

3rd angle projection

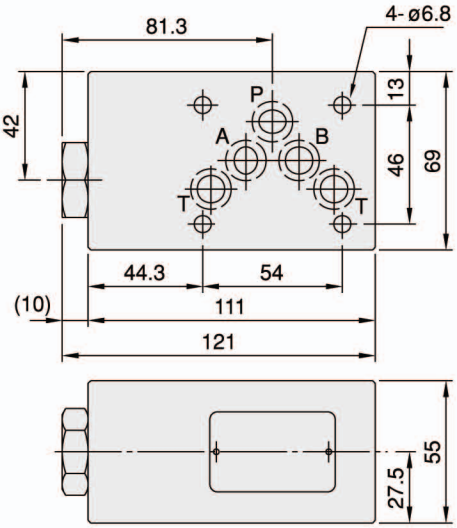

DGMCV-05-A- ∗-10

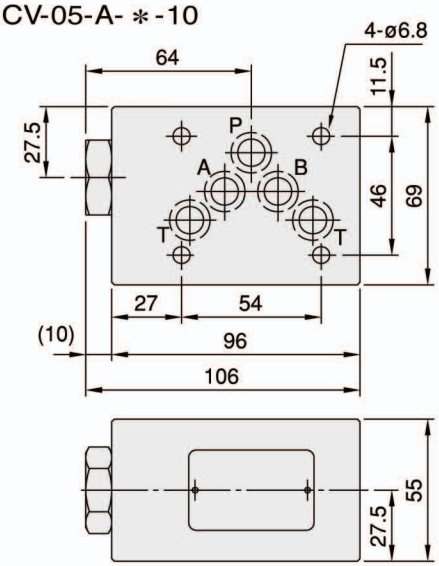

DGMCV-05-B- ∗-10

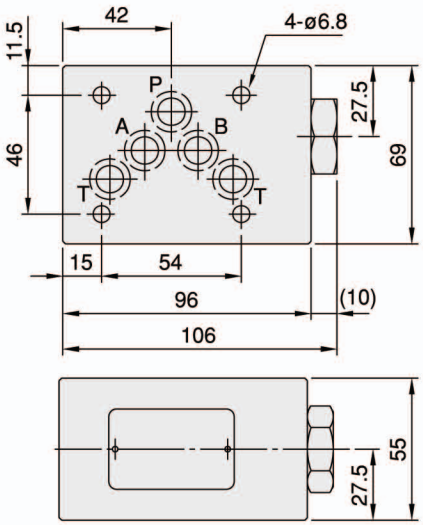

Cross Section Drawing :

DGMCV-05-P- ∗-10

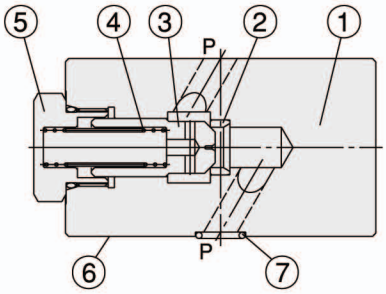

1. Body
2. Seat
3. Poppet
4. Spring
5. Nut
6. Connections to DIN 24340 from A10; valve fixing screws M6 DIN 912-10.9, tightening torque 12~15 Nm
7. O-ring AS586-014(Hs90) for ports A,B,P and T

EDGMAC05 Size 10

Characteristics :

- Highest performance in NG 10.
- Sandwich plate design for use in vertical stacking assemblies.
- Direct operated check valve.
- Be incorporated between A,B port and T port.
- This check valve of a certain type can be used for suction.
- Connections to DIN, ISO and CETOP.

Model: DGMAC-05-W-10

Specification :

Maximum flow	100 ℓ/min{26.5 GPM}
Maximum operating pressure	320 bar{4570 PSI}
Spring cracking pressure	0.15 bar{2.14 PSI}
Ambient temperature range	-20˚C~+50˚C
Hydraulic fluid temperature	-20˚C~+70˚C

Viscosity range	15~400 mm²/s
Hydraulic oil	ISO VG 32,46,68
Fluid cleanliness	NAS Class 9 MAX.
Mounting pattern	ISO 4401-AC-05-4-A
Weight	3.5 kg

Hydraulic Configuration:

DGMAC-05-W-10

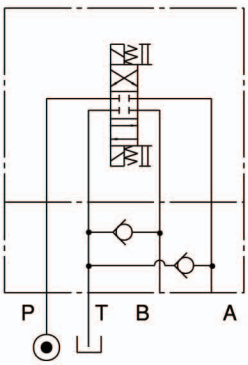

Installation Dimensions :

(Machined valve mounting face withpoisition of ports)

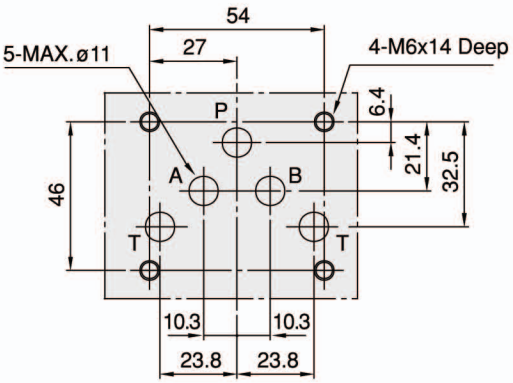

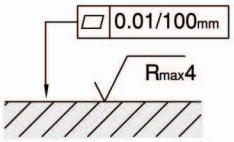

Required surface finish of mating piece

Ordering Code : EDGMAC05 Size 10

DGM	AC	-	05	-	W	-	10	-	* *
1	2		3		4		5		6

1	**Sandwich Plate Design**
2	**Vacuum Check Valve**
3	**Nominal Valve Size**
• Nominal valve size: NG 10, CETOP 5 and ISO 4401-05.	
4	**Configuration**
• W: double; be incorporated between A,B port and T port.	
5	**Design Number**
6	**Optional Inquiry**

Performance Curves :

Viscosity of Hydraulic Fluid: 32 mm²/s

Pressure Drop Characteristic

DGMAC-05-W-10

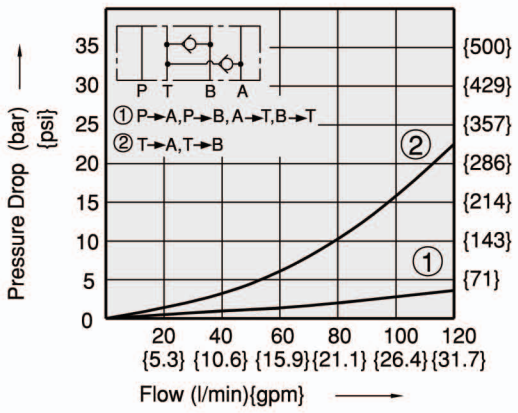

Dimensions : EDGMAC05 Size 10

DGMAC-05-W-10

3rd angle projection

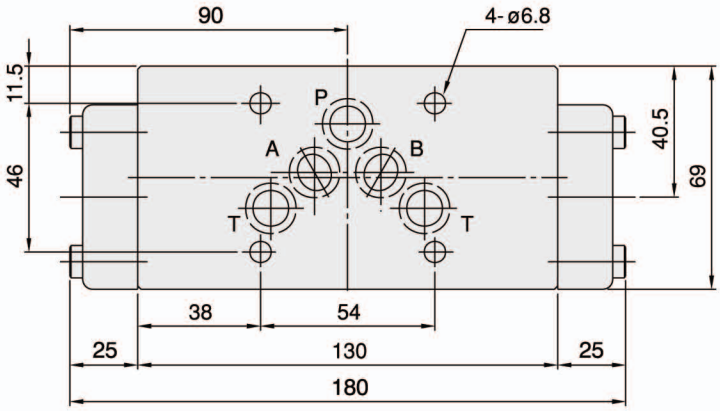

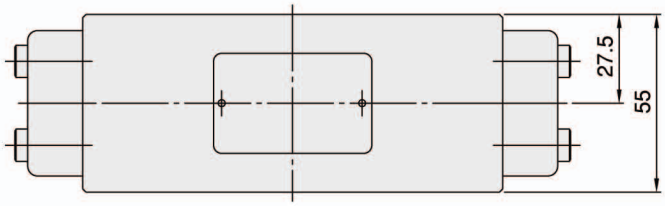

Cross Section Drawing :

DGMAC-05-W-10

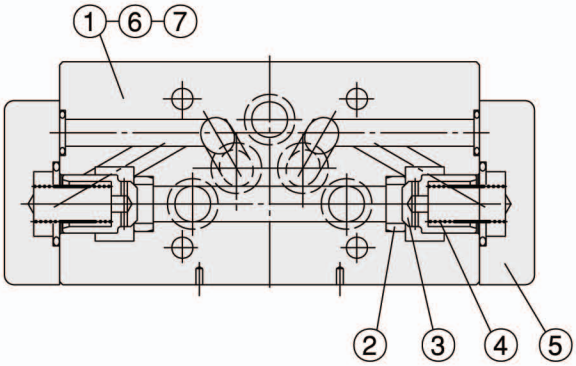

1. Body.
2. Seat.
3. Poppet.
4. Spring.
5. Cover.
6. Connections to DIN 24340 from A10; valve fixing screws M6 DIN 912-10.9, tightening torque 12~15 Nm.
7. O-ring AS586-014(Hs90) for ports A, B, P and T.

EQUUS

DGM-03

DGMBV03 Size 6

Characteristics :

- Highest performance in NG 6.
- Direct operated pressure relief valves.
- Sandwich plate design.
- 2 pressure adjusting ranges.
- 3 optional directions of flow.
- With one or two pressure relief cartridges.
- Connections to DIN, ISO and CETOP.

Model: DGMBV-03-W-1-10

Specification :

Maximum flow		20 ℓ /min {5.3 GPM}
Maximum operating pressure		320 bar {4570 PSI}
Pressure adjusting range		1: 8~70 bar
		3: 35~210 bar
Ambient temperature		-20˚C~+50˚C
Hydraulic fluid temperature		-20˚C~+70˚C
Viscosity range		15~400 mm²/s
Hydraulic oil		ISO VG 32, 46, 68
Fluid cleanliness		NAS Class 9 MAX.
Mounting pattern		ISO 4401-AB-03-4-A
Weight	W type	1.5 Kg
	A type	1.4 Kg
	B type	1.4 Kg

Hydraulic Configuration :

DGMBV-03-W- ∗-10

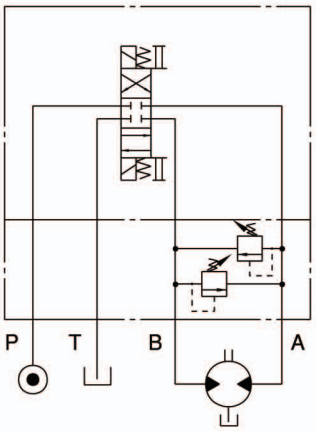

DGMBV-03-A- ∗-10

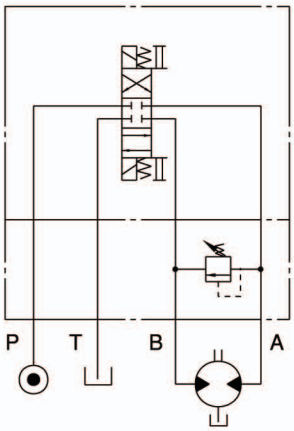

DGMBV-03-B- ∗-10

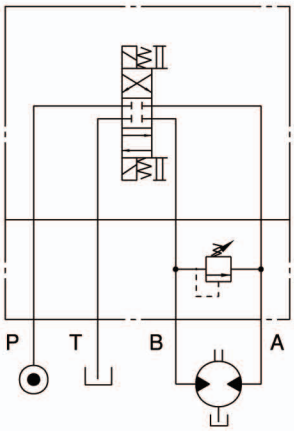

EDGMPC05 Size 10

Characteristics :

- Highest performance in NG 10.
- Sandwich plate design.
- Pilot operated check valve.
- For leak free sealing of one or two actuator port.
- Connections to DIN, ISO and CETOP.

Model: DGMPC-05-W-1-10

Specification :

Maximum flow		100 ℓ/min{26.5 GPM}
Maximum operating pressure		320 bar{4570 PSI}
Spring cracking pressure		1: 2 bar{29 PSI}
		2: 5 bar{71 PSI}
Area ratio	Pilot piston	1
	Check valve seat	0.33
	Needle valve seat	-
Ambient temperature range		-20˚C~+50˚C
Hydraulic fluid temperature		-20˚C~+70˚C
Viscosity range		15~400 mm²/s
Hydraulic oil		ISO VG 32,46,68
Fluid cleanliness		NAS Class 9 MAX.
Mounting pattern		ISO 4401-AC-05-4-A
Weight	W type	3.6 kg
	A type	3.6 kg
	B type	3.6 kg

Installation Dimensions :

(Machined valve mounting face with poisition of ports)

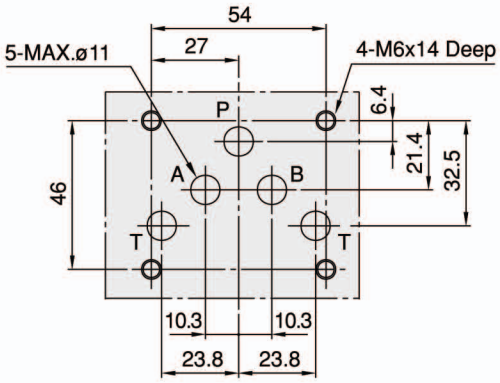

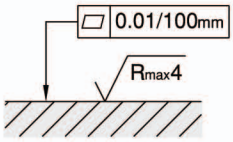

Required surface finish of mating piece

Hydraulic Configuration :

DGMPC-05-W- ∗-10

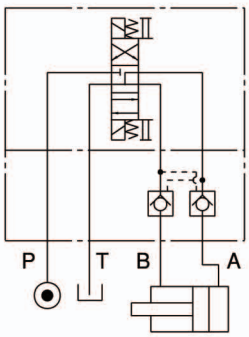

DGMPC-05-A- ∗-10

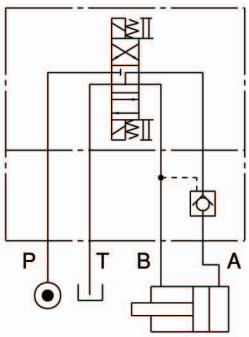

DGMPC-05-B- ∗-10

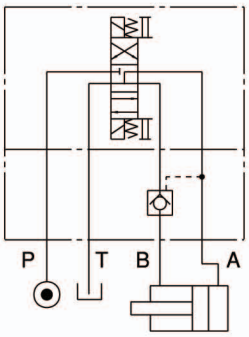

Ordering Code : EDGMPC05 Size 10

DGM	PC	-	05	-	W	-	1	-	10	-	＊＊
1	2		3		4		5		6		7

1 Sandwich Plate Design

2 Pilot Operated Check Valve

3 Nominal Valve Size

- Nominal valve size: NG 10, CETOP 5 and ISO 4401-05.

4 Configuration

- W: double; acting on ports A and B.
- A : single; acting on port A.
- B : single; acting on port B.

5 Spring Cracking Pressure

- 1: 2 bar.
- 2: 5 bar.

6 Design Number

7 Optional Inquiry

Performance Curves :

Viscosity of Hydraulic Fluid: 32 mm²/s

Pressure Drop Characteristic

DGMPC-05-W- ＊-10

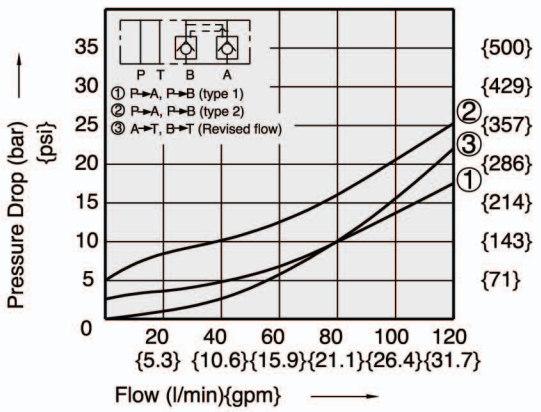

Min. Pilot Pressure Characteristic

DGMPC-05-W- ＊-10

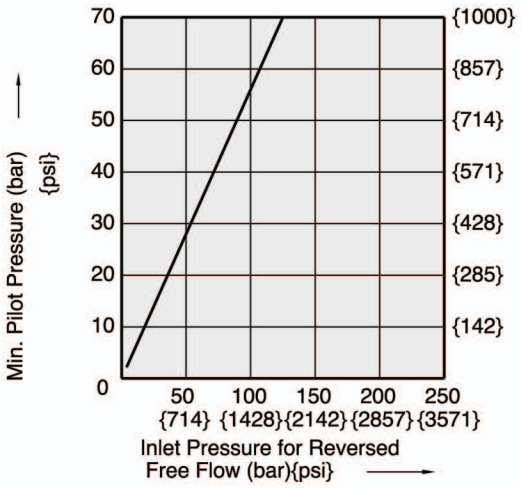

Dimensions : EDGMPC05 Size 10

DGMPC-05-W- ∗-10
DGMPC-05-A- ∗-10
DGMPC-05-B- ∗-10

3rd angle projection

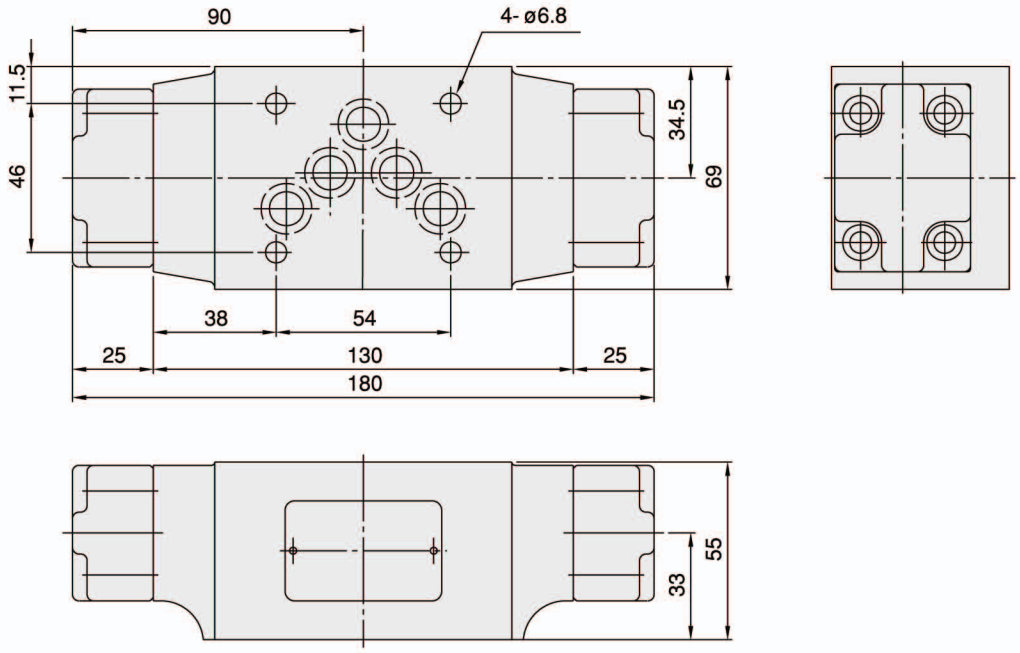

Cross Section Drawing :

DGMPC-05-A- ∗-10

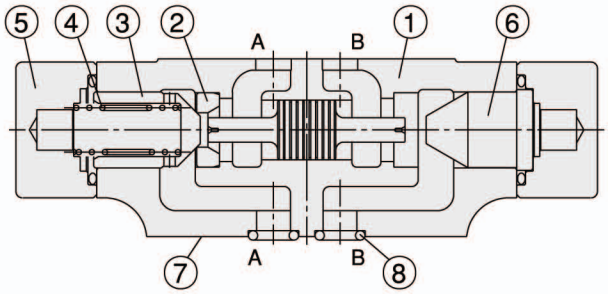

1. Body.
2. Seat.
3. Poppet.
4. Spring.
5. Cover.
6. Bushing.
7. Connections to DIN 24340 from A10; valve fixing screws M6 DIN 912-10.9, tightening torque 12~15 Nm.
8. O-ring AS586-014(Hs90) for ports A, B, P and T.

EDGMPD05 Size 10

Characteristics :

- Highest performance in NG 10.
- Sandwich plate design.
- Pilot operated check valve with decompression.
- For leak free sealing of one or two actuator ports.
- Connections to DIN, ISO and CETOP.

Model: DGMPD-05-W-1-10

Specification :

Maximum flow		100 ℓ/min{26.5 GPM}
Maximum operating pressure		320 bar{4570 PSI}
Spring cracking pressure		1: 2 bar{29 PSI}
		2: 5 bar{71 PSI}
Area ratio	Pilot piston	1
	Check valve seat	0.49
	Needle valve seat	0.07
Ambient temperature range		-20˚C~+50˚C
Hydraulic fluid temperature		-20˚C~+70˚C
Viscosity range		15~400 mm²/s
Hydraulic oil		ISO VG 32,46,68
Fluid cleanliness		NAS Class 9 MAX.
Mounting pattern		ISO 4401-AC-05-4-A
Weight	W type	3.6 kg
	A type	3.6 kg
	B type	3.6 kg

Installation Dimensions :

(Machined valve mounting face with poisition of ports)

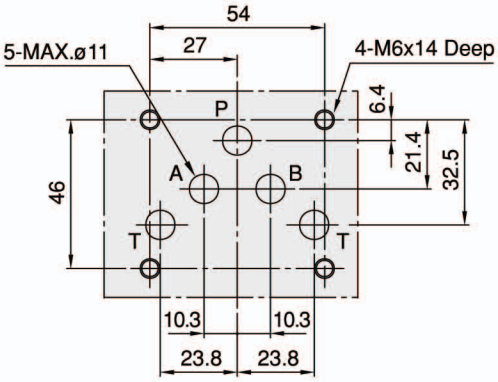

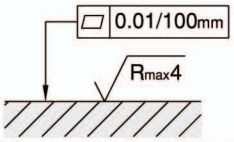

Required surface finish of mating piece

Hydraulic Configuration :

DGMPD-05-W- ∗-10

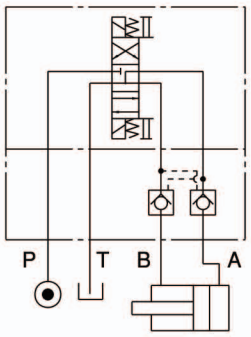

DGMPD-05-A- ∗-10

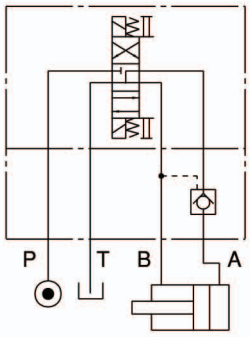

DGMPD-05-B- ∗-10

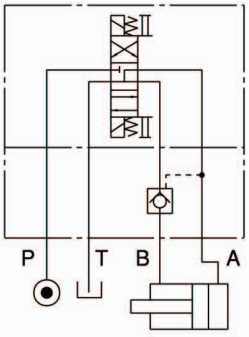

Ordering Code : EDGMPD05 Size 10

DGM	PD	-	05	-	W	-	1	-	10	-	**
1	2		3		4		5		6		7

1 Sandwich Plate Design

2 Pilot Operated Check Valve with Decompression

3 Nominal Valve Size

- Nominal valve size: NG 10, CETOP 5 and ISO 4401-05.

4 Configuration

- W: double; acting on ports A and B.
- A: single; acting on port A.
- B: single; acting on port B.

5 Spring Cracking Pressure

- 1: 2 bar.
- 2: 5 bar.

6 Design Number

7 Optional Inquiry

Performance Curves :

Viscosity of Hydraulic Fluid: 32 mm²/s

Pressure Drop Characteristic

DGMPD-05-W- *-10

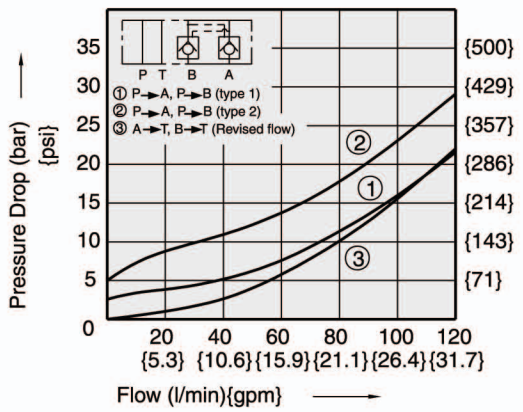

Min. Pilot Pressure Characteristic

DGMPD-05-W- *-10

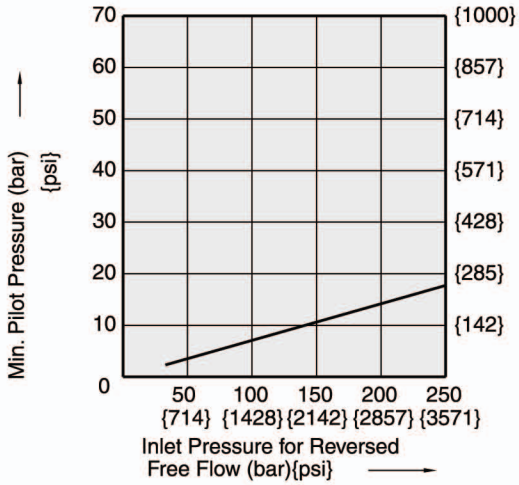

Dimensions : EDGMPD05 Size 10

DGMPD-05-W- ∗-10
DGMPD-05-A- ∗-10
DGMPD-05-B- ∗-10

3rd angle projection

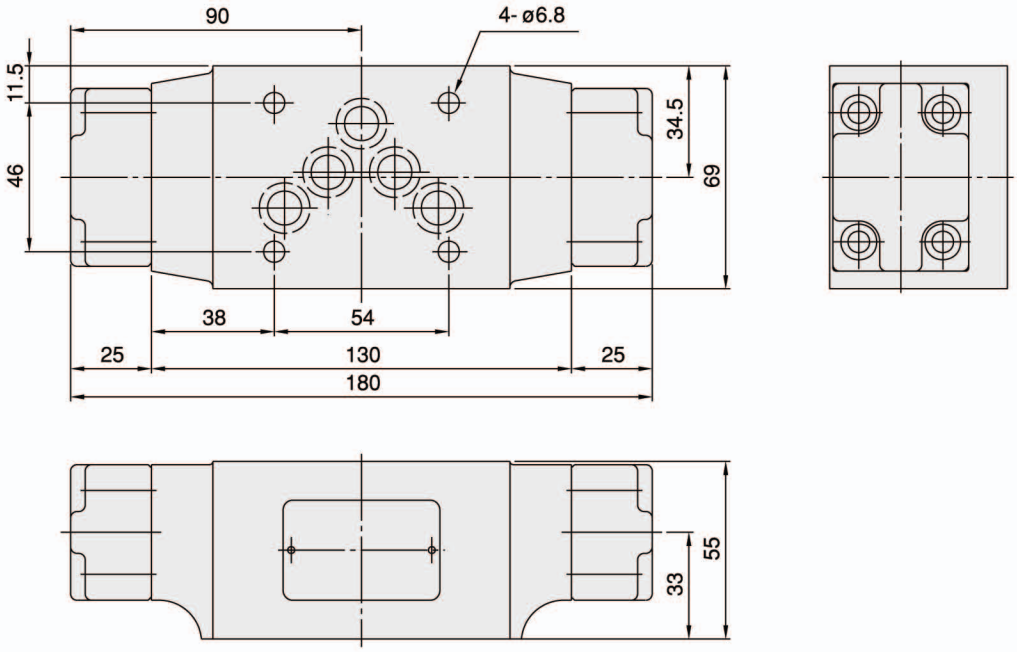

Cross Section Drawing :

DGMPD-05-A- ∗-10

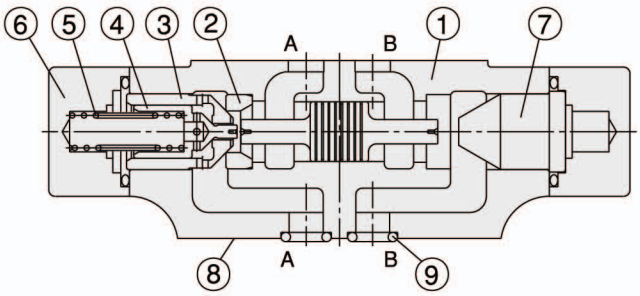

1. Body.
2. Seat.
3. Poppet-1.
4. Poppet-2.
5. Spring.
6. Cover.
7. Bushing.
8. Connections to DIN 24340 from A10; valve fixing screws M6 DIN 912-10.9, tightening torque 12~15 Nm.
9. O-ring AS586-014(Hs90) for ports A, B, P and T.

EDGMFB05 Size 10

Model: DGMFB-05-1-10

Specification :

Maximum flow	100 ℓ /min {26.5 GPM}
Maximum operating pressure	320 bar {4570 PSI}
Ambient temperature range	-20˚C~+50˚C
Hydraulic fluid temperature	-20˚C~+70˚C
Hydraulic oil	ISO VG 32, 46, 68
Mounting pattern	ISO 4401-AC-05-4-A

Hydraulic configuration :

DGMFB-05-1-10

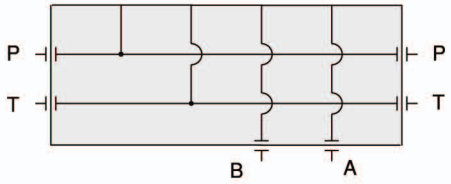

DGMFB-05- ＊-10

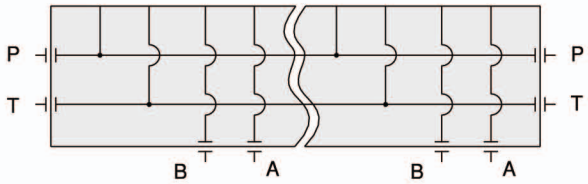

Ordering Code :

DGM FB - 05 - 1 - 10 - ＊＊

1 2 3 4 5 6

1 **Sandwich Plate Design**

2 **Manifold Block**

3 **Nominal Valve Size**

- Nominal valve size: NG 10, CETOP 5 and ISO 4401-05.

4 **Number of Controls in Vertical Stacking Design**

- 2: for 2 controls
- 3: for 3 controls
- 4: for 4 controls
- 5: for 5 controls
- 6: for 6 controls

5 **Design Number**

6 **Optional Inquiry**

Dimensions : EDGMFB05 Size 10

DGMFB-05-1-10

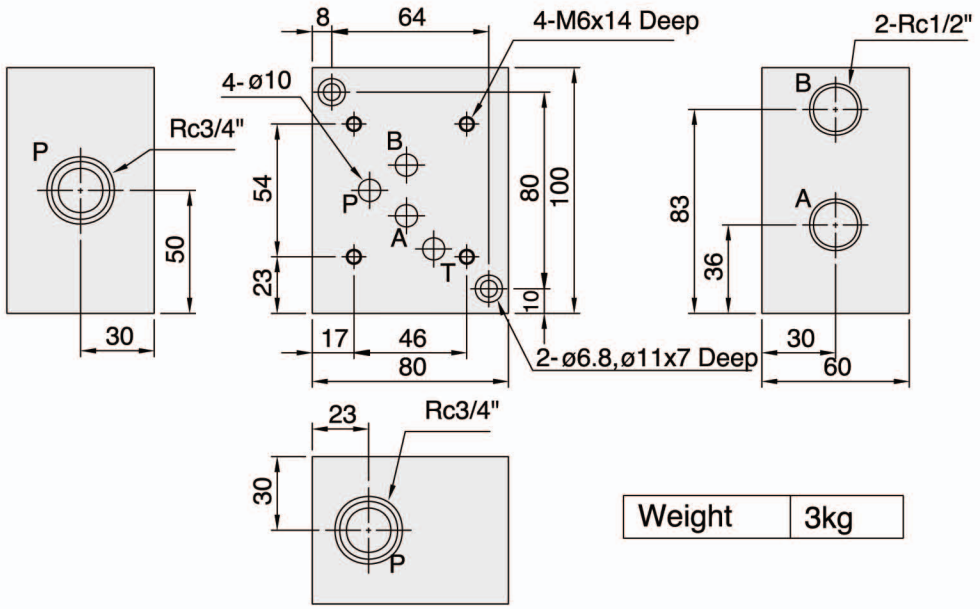

Weight	3kg

DGMFB-05- ∗ -10

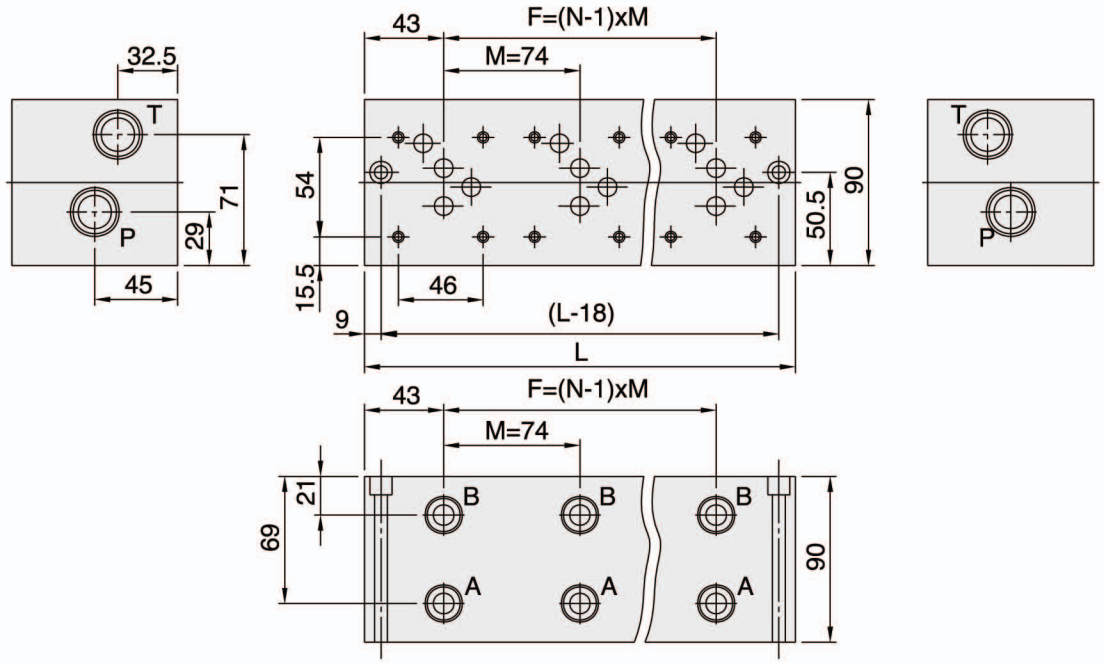

Mounting Dimensions

Types	N	F	L	A	B	P	T	Weight (kg)
DGMFB-05-2-10	2	74	164	Rc1/2"		Rc3/4"		10.4
DGMFB-05-3-10	3	148	238					15
DGMFB-05-4-10	4	222	312					19.7

Mounting Dimensions

Types	N	F	L	A	B	P	T	Weight (kg)
DGMFB-05-5-10	5	296	386	Rc1/2"		Rc3/4"		24.4
DGMFB-05-6-10	6	370	460					29

Hexagon Socket Head Bolt: 05 Size 10

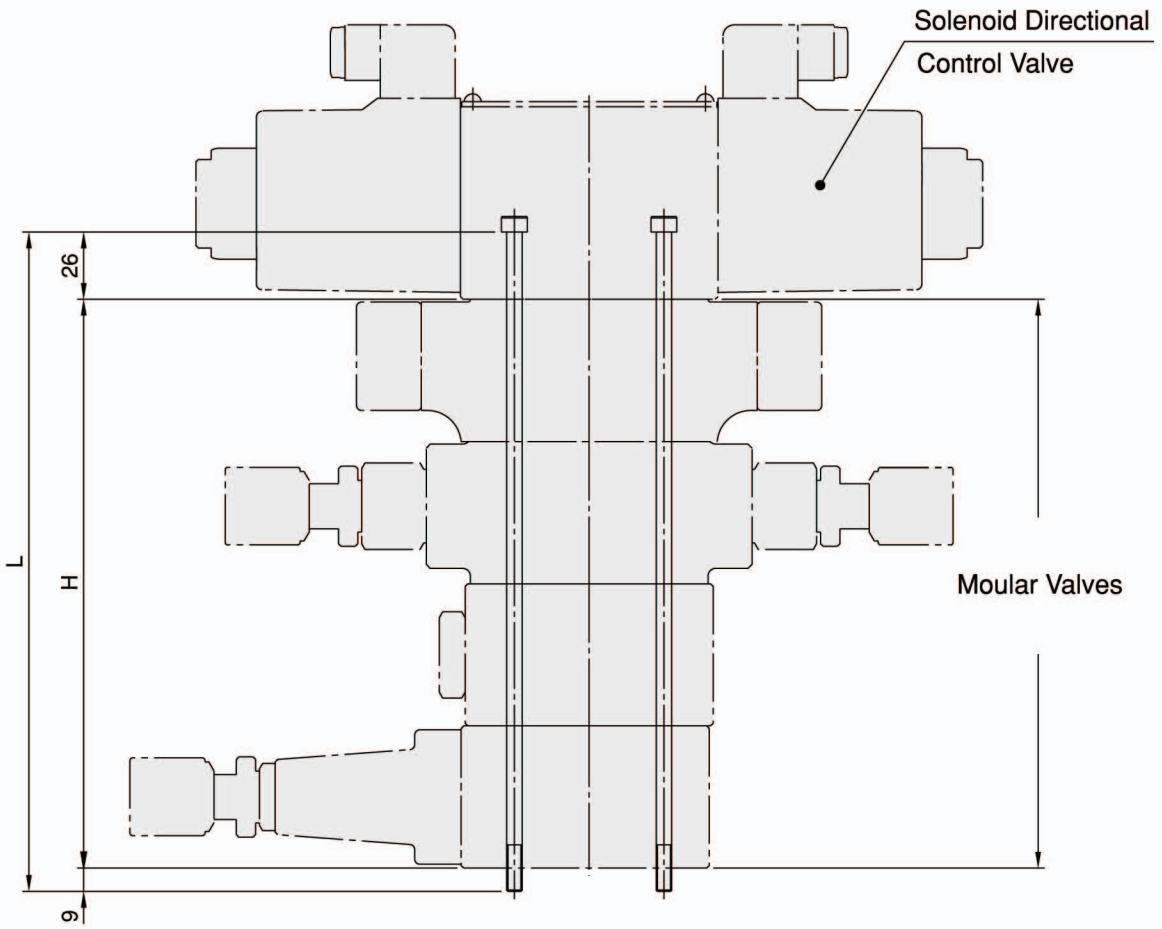

Numbers of the moular valves	H	L	Bolt length	
			Metric	Inch
1	55	90	M6x90Lx4 pcs.	1/4"~20UNCx3-5/8"Lx4 pcs.
2	110	145	M6x145Lx4 pcs.	1/4"~20UNCx5-3/4"Lx4 pcs.
3	165	200	M6x200Lx4 pcs.	1/4"~20UNCx7-1/2"Lx4 pcs.
4	220	255	M6x255Lx4 pcs.	1/4"~20UNCx10-1/8"Lx4 pcs.

Characteristics :

07 **Size 16**

- Highest performance in NG 16.
- Compacting stacking valves.
- Eliminating intervalve piping and fittings.
- Reducing leakage and installation costs.
- Max. Operating Pressure: 32 MPa.
- Max. Flow: 300 ℓ /min.
- Connections to DIN, ISO and CETOP.

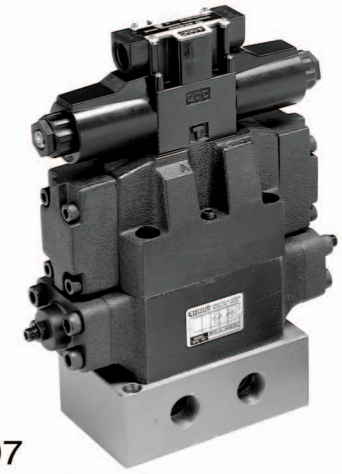

DGM-07
Modular Valve Series

Stacking Example:

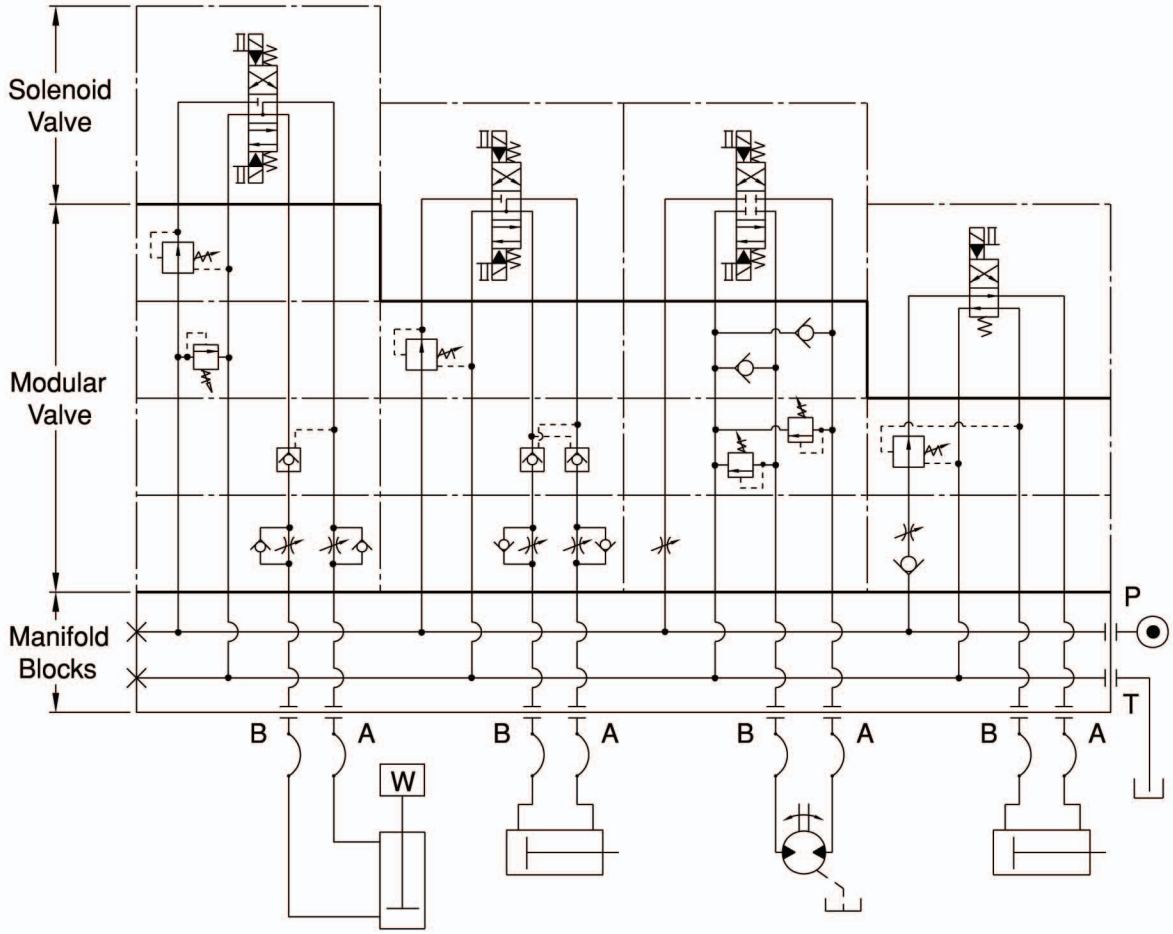

Ordering Code : EDGMBV03 Size 6

DGM	BV	-	03	-	W	-	1	-	10	-	＊＊
1	2		3		4		5		6		7

1 Sandwich Plate Design

2 Pressure Brake Valve

3 Nominal Valve Size

- Nominal valve size: NG 6, CETOP 3 and ISO 4401-03.

4 Configuration

- W: double; acting on ports A and B, with the relieved pressure cross-discharged.
- A: single; acting on port A, discharged to port B.
- B: single; acting on port B, discharged to port A.

5 Pressure Adjusting Range

- 1: 8~70 bar.
- 3: 35~210 bar.

6 Design Number

- 10: with handle.
- 20: without handle.

7 Optional Inquiry

Performance Curves :

Viscosity of Hydraulic Fluid: 32 mm²/s

Regulated Pressure Versus Flow Diagram

DGMBV-03- ＊- ＊-10

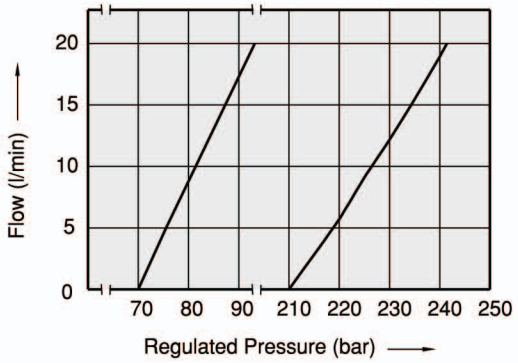

Installation Dimensions :

(Machined valve mounting face with poisition of ports)

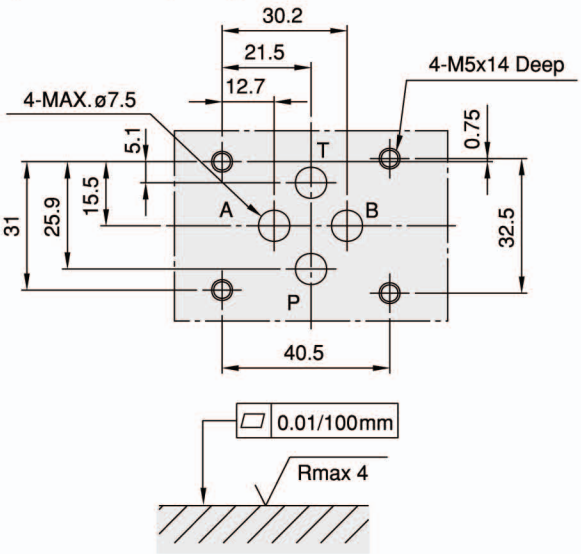

Required surface finish of mating piece

Care in Application :

07 Size 16

Valve Name	Wrong Example	Correct Example	Instructions
Solenoid operated directional control valve Pilot operated check valve (DGMPD-07-W-∗-10) Pressure reducing valve (DGMGV-07-B-∗-20)	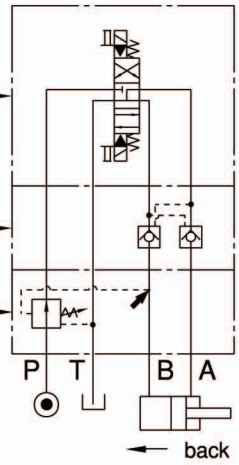	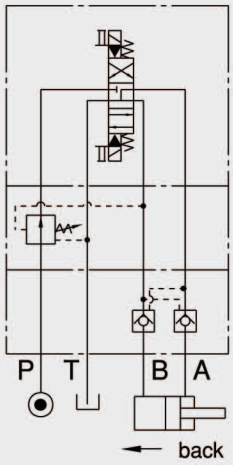	When DGMGV-07-B and DGMPD-07-W are used together in the same circuit, the right circuit is correct, and the left is wrong, as DGMPD-07-Wwould not be totally closed.
Solenoid operated directional control valve Flow regulator with metered out check (DGMTC-07-W-O-20) Pilot operated check valve (DGMPD-07-W-∗-10)	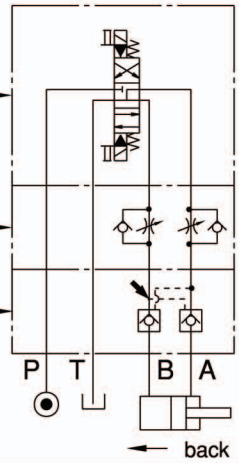	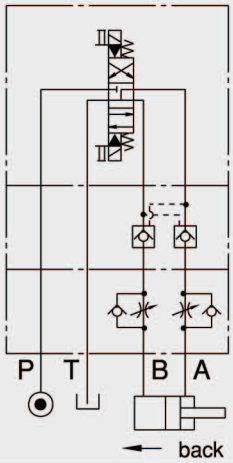	When DGMTC-07-W-O and DGMPD-07-W are used together in the same circuit , DGMTC-07-W-O should be installed closer to the cylinder ports, otherwise the cylinder may have a "knocking" phenomenon happened.
Solenoid operated directional control valve Flow regulator with metered out check (DGMTC-07-W-O-20) Pressure reducing valve (DGMGV-07-B-∗-20)	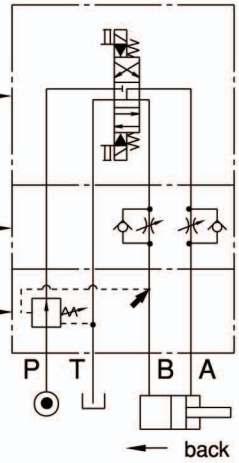	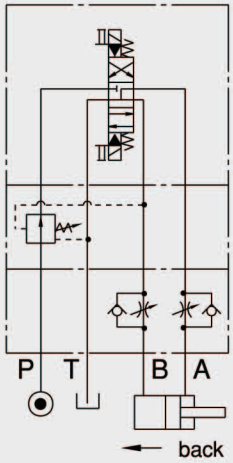	When DGMGV-07-B and DGMTC-07-W-O are used together in the same circuit, the right circuit is correct, and the left is wrong, as the function of DGMGV-07-B will be affected when oil flow from B port to T port. Because DGMTC-07-W-O will create a pressure which will cause DGMGV-07-B to reduce the pressure too low, and the cylinder then can not operate with enough force or move smoothly.

List of Modular Valve Series : 07 Size 16

Classification	Valve Name	Valve Model	Pressure Adjusting Range (bar)	Max. Flow (L/min)	Hydraulic Symbol	Weight (Kg)	Refer Page
Directional Control Valve	Solenoid Valve	DG07- ∗- ∗-70	320	300	P T B A		J 21-28
Pressure Control Valve	Relif Valve	DGMRV-07-P- ∗-20	1: 7~70 2: 7~140 3: 7~210	300		7.4	92
	Reducing Valve (Balance type)	DGMGV-07-P- ∗-20	1: 7~70 2: 7~140 3: 7~210	300		8.6	95
		DGMGV-07-A- ∗-20				8.6	
		DGMGV-07-B- ∗-20				8.6	
	Counter Balance Valve	DGMCB-07-A1- ∗-20	1: 5~35 2: 20~140	300		8.7	98
		DGMCB-07-B1- ∗-20				8.7	
Flow Control Valve	Flow Regulator With Metered Out Check	DGMTC-07-W-O-20	Cracking Pressure: 1.0	300		6.9	101
		DGMTC-07-A-O-20				6.7	
		DGMTC-07-B-O-20				6.7	
	Flow Regulator With Metered In Check	DGMTC-07-W-I-20	Cracking Pressure: 1.0	300		6.9	101
		DGMTC-07-A-I-20				6.7	
		DGMTC-07-B-I-20				6.7	
Directional Control Valve	Check Valve	DGMCV-07-P- ∗-10	Cracking Pressure: 1: 0.4 2: 3.5 3: 5.0	300		4.6	105
		DGMCV-07-T- ∗-10				6.5	
		DGMCV-07-A- ∗-10				4.6	
	Pilot Check Valve (With decom-pression)	DGMPD-07-W- ∗-10	Cracking Pressure: 1: 2 2: 5	300		7.0	108
		DGMPD-07-A- ∗-10				7.0	
		DGMPD-07-B- ∗-10				7.0	

EDGMRV07 Size 16

Characteristics :

- Highest performance in NG 16.
- Double stage pressure relief valves with balance poppet.
- Sandwich plate design.
- 3 pressure ranges.
- Connections to DIN, ISO and CETOP.

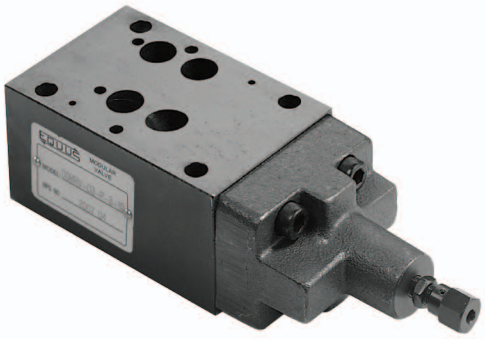

Model: DGMRV-07-P-1-20

Specification :

Maximum flow	300 ℓ /min {79.3 GPM}
Maximum operating pressure	320 bar {4570 PSI}
Pressure adjusting range	1: 7~70 bar
	2: 7~140 bar
	3: 7~210 bar
Ambient temperature range	-20˚C~+50˚C

Hydraulic fluid temperature	-20˚C~+70˚C
Viscosity range	15~400 mm²/s
Hydraulic oil	ISO VG 32,46,68
Fluid cleanliness	NAS Class 9 MAX.
Mounting pattern	ISO 4401-AC-05-4-A
Weight	7.4 kg

Hydraulic Configuration :

DGMRV-07-P- ∗-20

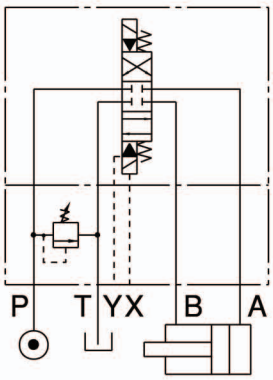

Installation Dimensions :

(Machined valve mounting face with poisition of ports)

Mounting Surface: ISO 4401-AD-07-4-A

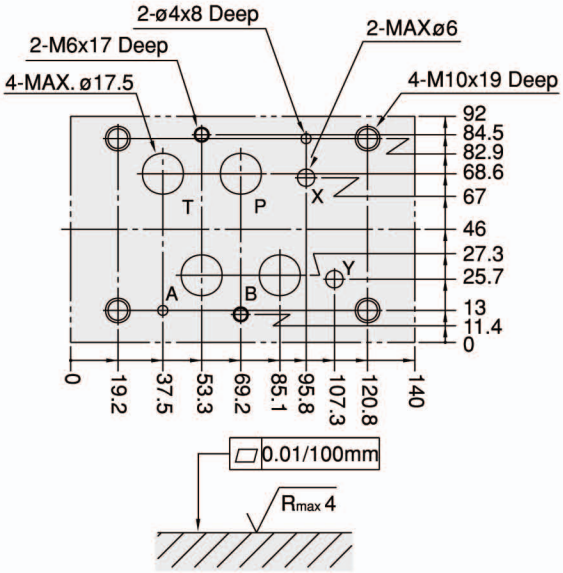

Required surface finish of mating piece when fitting the valve without subplate

DGM-07

Ordering Code : EDGMRV07 Size 16

DGM RV - 07 - P - 1 - 20 - * *

1 2 3 4 5 6 7

1 Sandwich Plate Design

2 Pressure Relief Valve

3 Nominal Valve Size

- Nominal valve size: NG 16, CETOP 7 and ISO 4401-07.

4 Configuration

- P: single; acting on port P, discharge to port T.

5 Pressure Adjusting Range

- 1: 7 ~ 70 bar.
- 2: 7 ~ 140 bar.
- 3: 7 ~ 210 bar.

6 Design Number

- 10: with handle.
- 20: without handle.

7 Optional Inquiry

Performance Curves :

Viscosity of Hydraulic Fluid: 32 mm²/s

Minimum Pressure Versus Flow Diagram

DGMRV-07-P-1-20

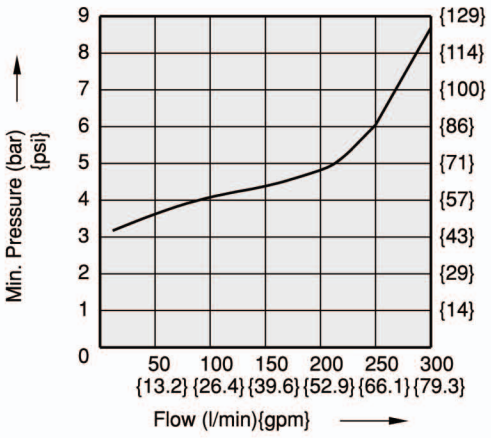

Regulated Pressure Versus Flow Diagram

DGMRV-07- * -20

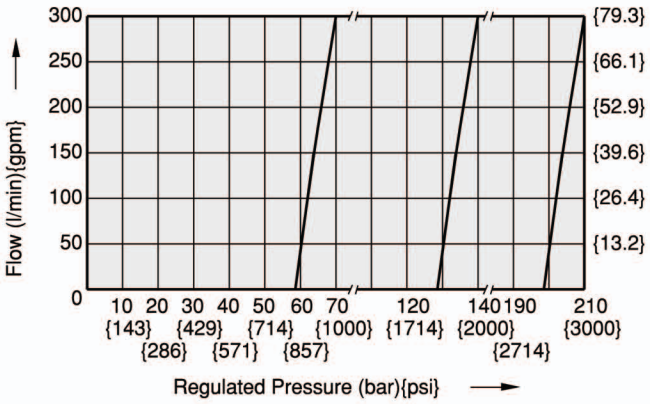

Dimensions : EDGMRV07 Size 16

DGMRV-07-P- ∗-20

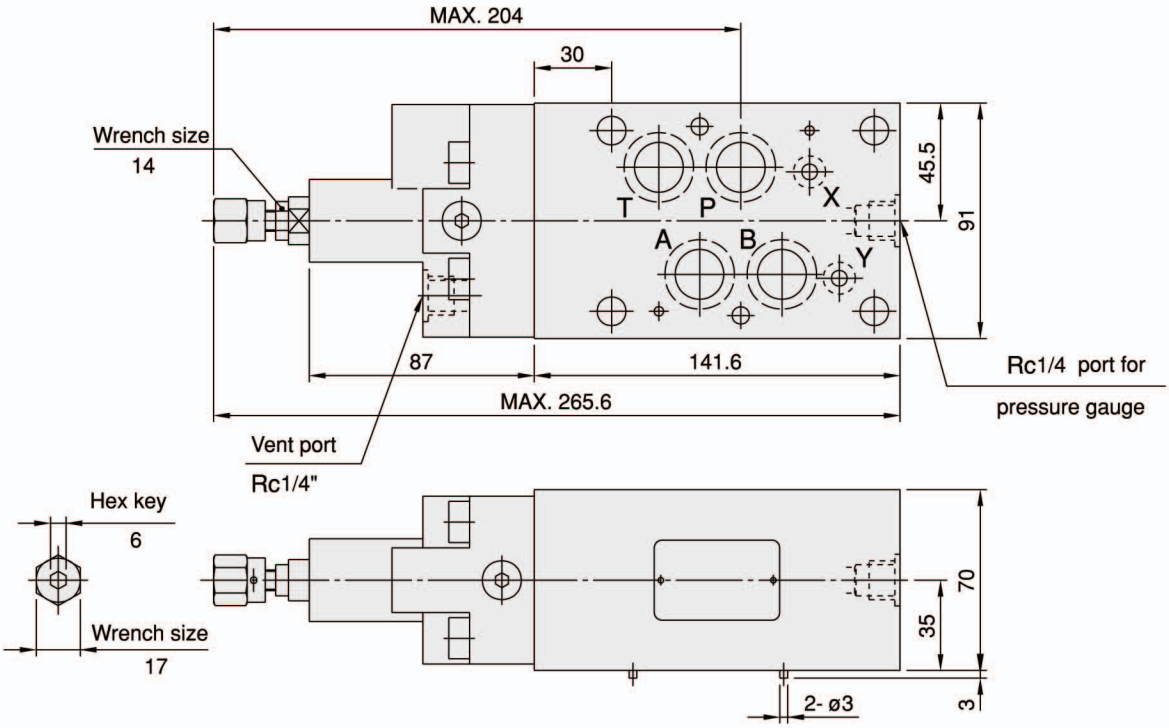

Cross Section Drawing :

DGMRV-07-P- ∗-20

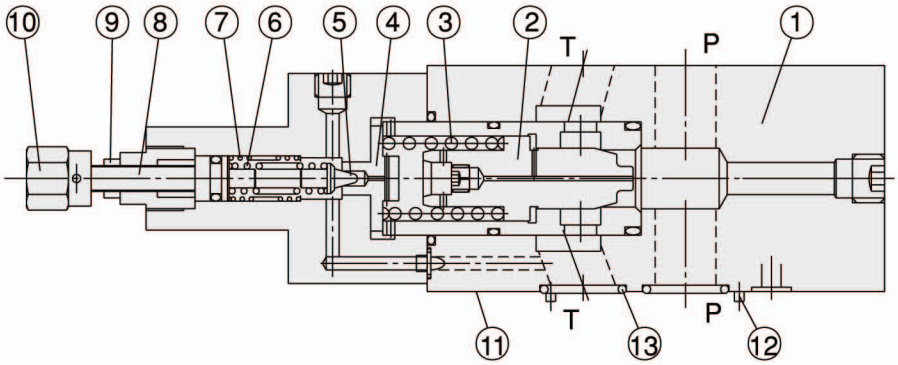

1. Body
2. Balanced poppet
3. Balanced poppet spring
4. Seat
5. Pilot valve poppet
6. Adjustment spring 1
7. Adjustment spring 2
8. Setting screw
9. Locking nut
10. Adjustment element
11. Connections to DIN 24340 from A16; 6 through holes for fixing screws
12. 2 locating pins
13. O-ring:
    Ports A,B,P,T: AS568-118(NBR,Hs90);
    Ports X,Y: AS568-013(NBR,Hs90)

EDGMGV07 Size 16

Characteristics :

- Highest performance in NG 16.
- Double stage pressure reducing valve.
- Sandwich plate design.
- 3 pressure adjusting ranges.
- 3 optional effective directions of flow.
- Pressure reduction in ports A,B or P.
- Connections to DIN, ISO and CETOP.

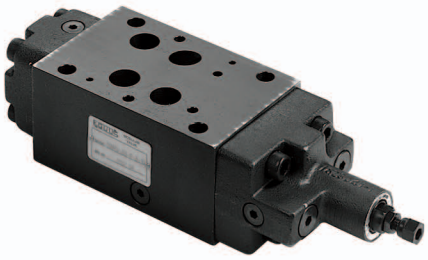

Model: DGMGV-07-P-1-20

Specification :

Maximum flow		300 ℓ/min{79.3 GPM}
Maximum operating pressure		320 bar{4570 PSI}
Pressure adjusting range		1: 7~70 bar
		2: 7~140 bar
		3: 7~210 bar
Ambient temperature range		-20˚C~+50˚C
Hydraulic fluid temperature		-20˚C~+70˚C
Viscosity range		15~400 mm²/s
Hydraulic oil		ISO VG 32,46,68
Fluid cleanliness		NAS Class 9 MAX.
Mounting pattern		ISO 4401-AD-07-4-A
Weight	P type	8.6 kg
	A type	8.6 kg
	B type	8.6 kg

Installation Dimensions :

(Machined valve mounting face with poisition of ports)

Mounting Surface: ISO 4401-AD-07-4-A

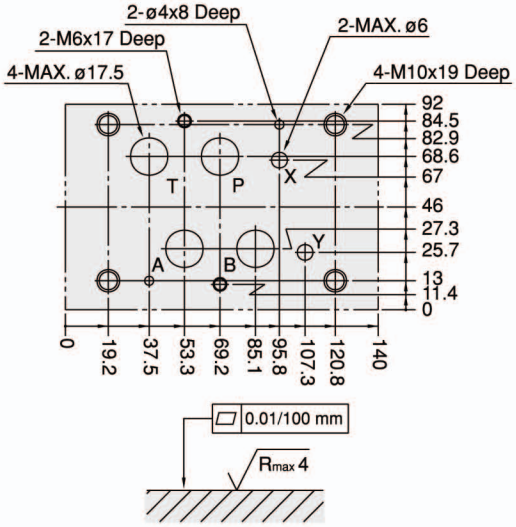

Required surface finish of mating piece when fitting the valve without subplate

Hydraulic Configuration :

DGMGV-07-P- ∗-20

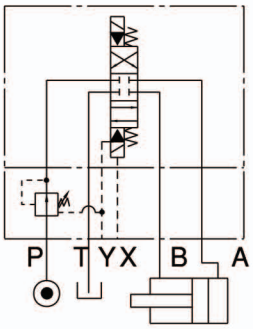

DGMGV-07-A- ∗-20

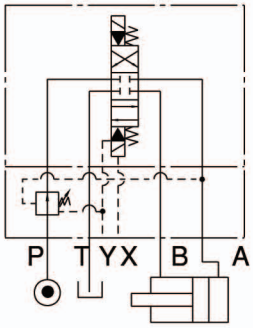

DGMGV-07-B- ∗-20

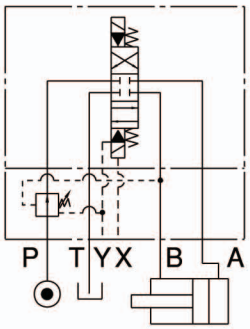

Ordering Code : EDGMGV07 Size 16

DGM GV - 07 - P - 1 - 20 - ＊＊

1 2 3 4 5 6 7

1 Sandwich Plate Design

2 Pressure Reducing Valve

3 Nominal Valve Size

- Nominal valve size: NG 16, CETOP 7 and ISO 4401-07.

4 Configuration

- P: reduced pressure on P port.
- A: reduced pressure on A port.
- B: reduced pressure on B port.

5 Pressure Adjusting Range

- 1: 7 ~ 70 bar.
- 2: 7 ~ 140 bar.
- 3: 7 ~ 210 bar.

6 Design Number

- 10: with handle.
- 20: without handle.

7 Optional Inquiry

Performance Curves :

Viscosity of Hydraulic Fluid: 32 mm²/s

Pressure Drop Characteristic

DGMGV-07-P- ＊-20

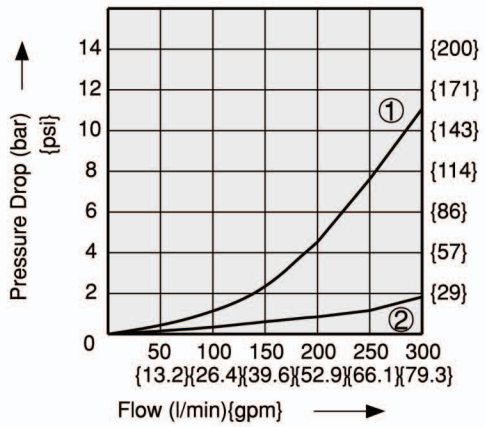

Regulated Pressure Versus Flow Diagram

DGMGV-07-P- ＊-20

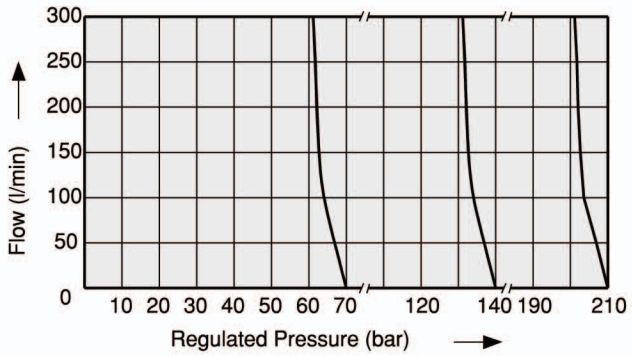

1. differential pressure variation versus variation of flow between inlet port and use port
2. differential pressure variation versus variation of flow between use port and discharge port

Dimensions : EDGMGV07 Size 16

DGMGV-07-P- ∗-20
DGMGV-07-A- ∗-20
DGMGV-07-B- ∗-20

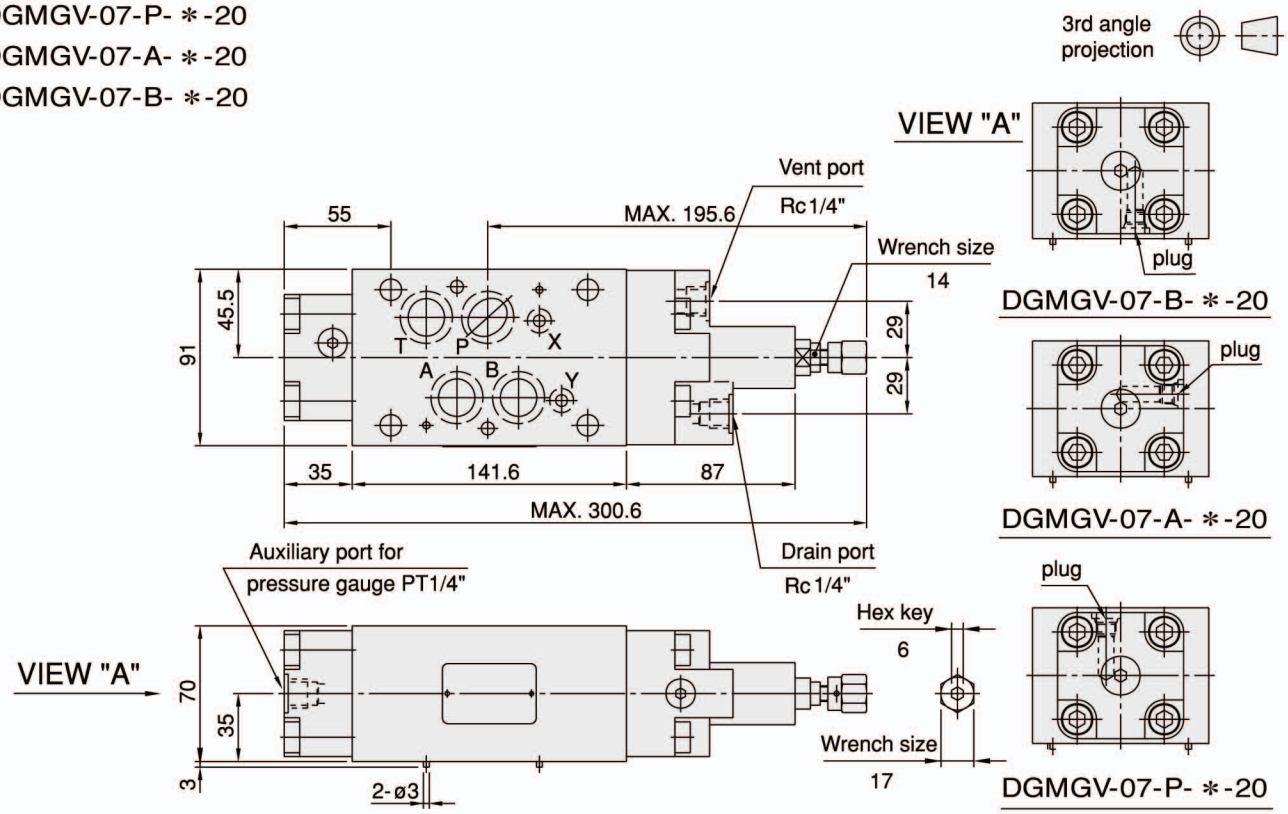

Cross Section Drawing :

DGMGV-07-P- ∗-20

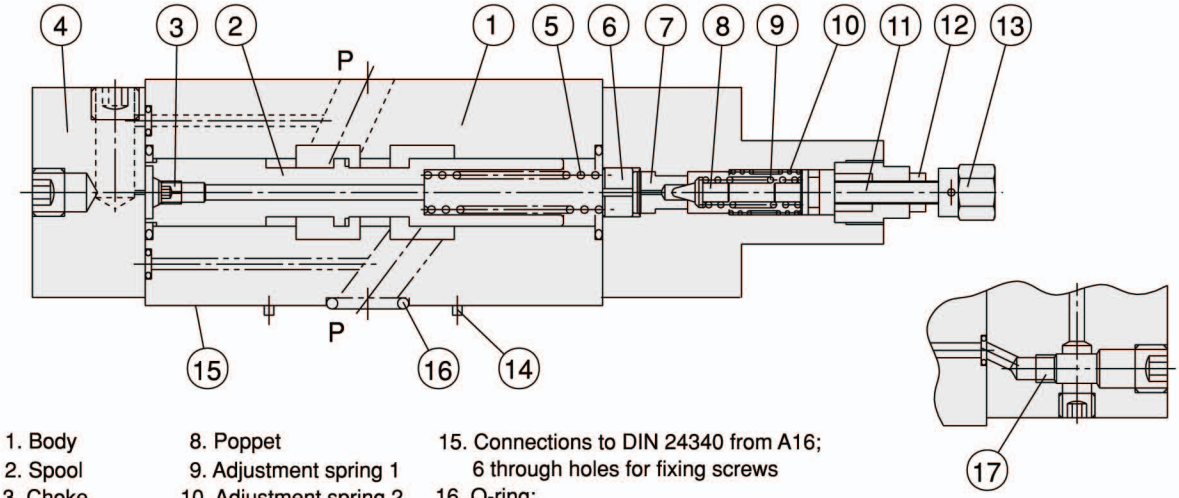

1. Body
2. Spool
3. Choke
4. Cover
5. Spool spring
6. Collar
7. Seat
8. Poppet
9. Adjustment spring 1
10. Adjustment spring 2
11. Setting screw
12. Locking nut
13. Adjustment element
14. 2 locating pins
15. Connections to DIN 24340 from A16; 6 through holes for fixing screws
16. O-ring:
    Ports A,B,P,T: AS568-118(NBR,Hs90);
    Ports X,Y: AS568-013(NBR,Hs90)

Pilot oil drain(plug: PT1/16")
external: 17 plugged
internal: 17 open

EDGMCB07 Size 16

Characteristics :

- Highest performance in NG 16.
- Direct operated pressure counter balance valve.
- Used for actuator back pressure control.
- Sandwich plate design.
- Connections to DIN, ISO and CETOP.

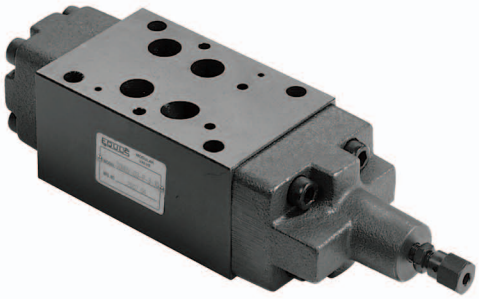

Model: DGMCB-07-B1-1-20

Specification :

Maximum flow		300 ℓ /min {79.3 GPM}
Maximum operating pressure		320 bar {4570 PSI}
Pressure adjusting range		1: 5~35 bar
		2: 20~140 bar
Ambient temperature range		-20˚C~+50˚C
Hydraulic fluid temperature		-20˚C~+70˚C
Viscosity range		15~400 mm²/s
Hydraulic oil		ISO VG 32,46,68
Fluid cleanliness		NAS Class 9 MAX.
Mounting pattern		ISO 4401-AD-07-4-A
Weight	A type	8.7 kg
	B type	8.7 kg

Installation Dimensions :

(Machined valve mounting face with poisition of ports)

Mounting Surface: ISO 4401-AD-07-4-A

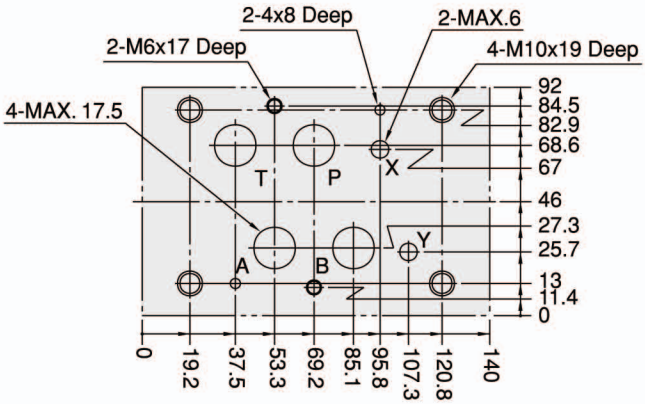

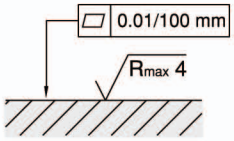

Required surface finish of mating piece when fitting the valve without subplate

Hydraulic Configuration :

DGMCB-07-A1- ∗-20

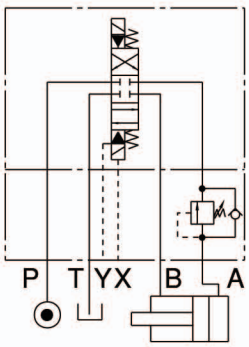

DGMCB-07-B1- ∗-20

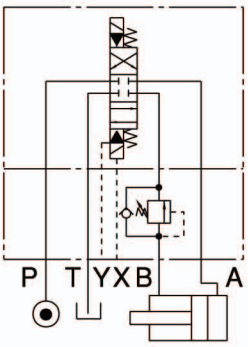

Ordering Code : EDGMCB07 Size 16

DGM CB - 07 - B1 - 1 - 20 - ＊＊

1 2 3 4 5 6 7 8

1 Sandwich Plate Design

2 Pressure Counter Balance Valve

3 Nominal Valve Size

- Nominal valve size: NG 16, CETOP 7 and ISO 4401-07.

4 Control Port

- A: A port.
- B: B port.

5 Type

- 1: internal pilot , internal drain.

6 Pressure Adjusting Range

- 1: 5 ~ 35 bar
- 2: 20 ~ 140 bar

7 Design Number

- 10: with handle
- 20: without handle

8 Optional Inquiry

Performance Curves :

Viscosity of Hydraulic Fluid: 32 mm²/s

Pressure Drop Characteristic

DGMCB-07-A1-1-20

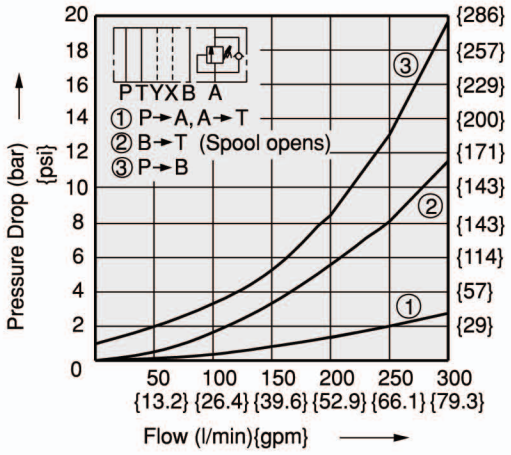

Regulated Pressure Versus Flow Diagram

DGMCB-07-A1- ＊-20 —— pressure increasing
DGMCB-07-B1- ＊-20 ------ pressure decreasing